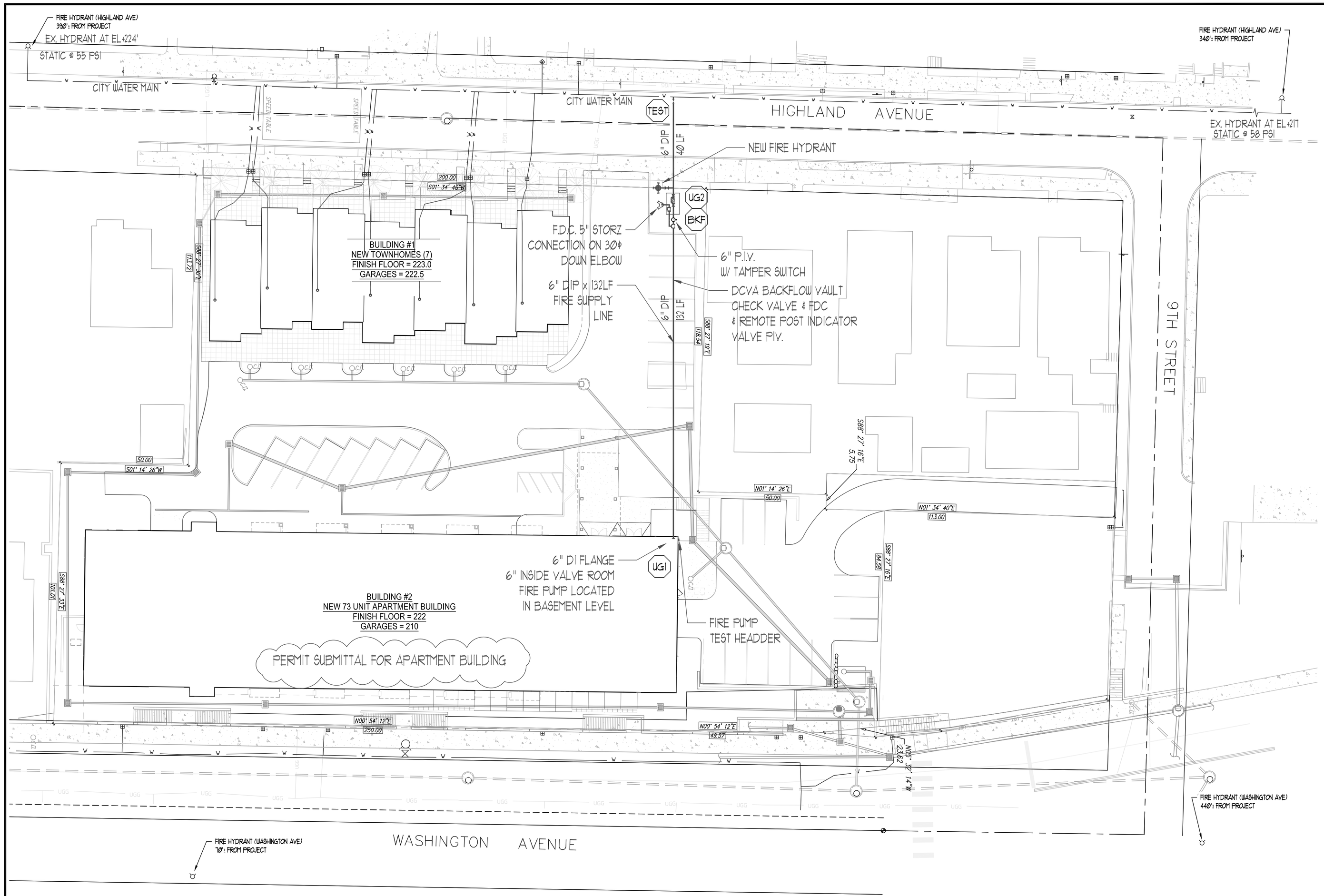

GRAPHIC SCALE

20 0 20 40 80

(IN FEET)

1 inch = 20 ft.

FIRE PROTECTION SITE PLAN

SCALE: 1"= 20'-0

UNDERGROUND NOTES:

1) ALL UNDERGROUND BY OTHERS. Contractor to be State Licenced and Certified to install Underground Piping Per WAC 212-80.
2) Pipe type and class to meet Local Jurisdiction Approval.
3) All underground piping shall have a Minimum 3'-0" Bury.
4) All underground piping shall be UL Listged and/or FM Approved for Fire Protection.
5) All underground piping shall be rodded and/or blocked in accordance with the specifications and NFPA 24.
6) All underground piping shall be Hydrostatically tested at not less than 200 PSI for two hours in accordance with NFPA 24.
7) All underground piping shall be flushed in accordance with NFPA 24. Flow the required rate until water is clear as indicated by no collectioin of foreign material in burlap bags at outlets.

4" - 390 GPM	10" - 2,400 GPM
6" - 880 GPM	12" - 3,520 GPM
8" - 1,560 GPM	

8) All underground installation and testing to be witnessed by the local authority having jurisdiction.

Overhead Fire System Notes:

1. SYSTEM TYPE: DRY SYSTEM FOR PARKING GARAGE, CPVC WET SYSTEM THROUGHOUT LEVELS 1-5.
2. CONSTRUCTION TYPE: PARKING GARAGE NON-COMBUSTIBLE UNOBSTRUCTED, LEVELS 1-5 COMBUSTIBLE, UNOBSTRUCTED
3. SPRINKLER SYSTEM DESIGNED, INSTALLED, BRACED AND TESTED PER NFPA-13 (2010).
4. ALL MATERIAL SHALL BE NEW AND UL. LISTED AND FM. APPROVED.
5. IN LOCALITIES SUBJECT TO FREEZING CONDITIONS, IT IS THE CONTRACTORS & OWNERS RESPONSIBILITY TO INSULATE WET SYSTEMS PROPERLY & TO PROVIDE HEAT THROUGHOUT THE WET PIPE SPRINKLER AREAS AND IN ENCLOSURES FOR DRY PIPE, DELUGE AND OTHER TYPES OF VALVE CONTROLLING WATER SUPPLIES TO SPRINKLER SYSTEMS.
6. SPRINX FIRE PROTECTION SHALL NOT BE RESPONSIBLE FOR THE ABILITY OF THE STRUCTURE TO ADEQUATELY SUPPORT THE FIRE SPRINKLER SYSTEM OR ANY APPURTENANCES THEREOF.
7. ALL ELECTRICAL, PAINTING, FURRING, CUTTING OR PATCHING TO BE BY OTHERS.
8. PIPE SIZING PER NFPA-13 (2010), SYSTEM HYDRAULICALLY CALCULATED.
9. EARTHQUAKE BRACING PER NFPA-13 (2010).
10. ONLY NEW SPRINKLERS SHALL BE EMPLOYED IN THE INSTALLATION OF THE SPRINKLER SYSTEM.
11. A STOCK OF SPARE SPRINKLERS OF EACH STYLE, TYPE, AND TEMP. RATING ALONG WITH A SPRINKLER HEAD WRENCH SHALL BE LOCATED AT THE MAIN RISER.
12. ALL MAIN PIPING 2½" - 4" IN SIZE TO BE ALLIED DYNAFLOW THINWALL PIPE. ALL MAIN PIPING TO HAVE GROOVED FITTINGS WITH WELDED OUTLETS
13. ALL LINE PIPING 1" - 2" IN SIZE TO BE SCH-40, OR DYNA-THREAD PIPE, WITH CAST OR DUCTILE IRON THREADED FITTINGS.
14. SLOPE ALL DRY MAIN PIPING A MINIMUM 1/4" PER 10'-0", SLOPE ALL DRY SYSTEM LINES A MINIMUM 1/2" PER 10'-0".
15. DRY SYSTEM HANGERS TO BE HILTI DROP-IN ANCHORS, PRE-SET HILTI HCI-IUF CAST IN ANCHORS, ROD AND RINGS.
16. CPVC WET SYSETM HANGERS TO BE TOLCO FIG# 22, 23, 24, #28 OFFSET, #29 DOUBLE OFFSET HANGERS. (SEE HANGER DETAILS)

VICINTIY MAP

FLOW TEST INFORMATION	
STATIC	55 PSI
RESIDUAL	53/20 PSI
FLOWING	694 /2077 GPM
LOCATION	642 HIGHLAND AVE
DATE OF TEST	7/15/2015 8:00 AM
BY WHO	SPRINX & BREM. WATER DEPT.

TEST ELEVATION AT +224' WITH WATER PRESSURE OF 55 PSI
ROOF ELEVATION AT +272'-0" WITH WATER PRESSURE AT ROOF 35 PSI.
NOT ADEQUATE WITHOUT FIRE PUMP.

Sprinkler Head Schedule

Symbol	Count	Thread	K-Factor	Description	Note
⊙	583	1/2"	4.9	HEAD1– TYCO TY2234 LFII RESIDENTIAL PENDENT WHITE 155 DEG.	on Drop
◬	28	1/2"	5.6	HEAD17– TYCO TY3531 RFII QR CONCEALED PENDENT WHITE 155 DEG.	on Drop
○	40	1/2"	5.6	HEAD2– TYCO TY313 TY–FRB BRASS UPRIGHT 155 DEG.	
⊗	77	3/4"	11.2	HEAD4– TYCO TY5137 EC–11 EX. COVERAGE UPRIGHT BRASS 155 DEG	
⊛	110	1/2"	5.6	HEAD6B– TYCO TY323 TY–FRB QR RECESSED PENDENT WHITE 155 DEG	on Drop
◀	49	1"	5.6	SIDE1– TYCO TY3335 DS–1 DRY HORZ. SIDEWALL 155 DEG.	
◁	9	1/2"	5.6	SIDE2– TYCO TY3331 TY–FRB QR HORZ. SIDEWALL WHITE 155 DET.	
896 = Total Number of Heads TOTAL PROJECT					

SPRINX FIRE PROTECTION
2709 JAHN AVE. NW. SUITE H2
Gig Harbor, WA. 98335-1735
Phone 253.853.7780
Fax 253.853.3890
EST. 1999

A Fire Sprinkler Corporation
Contr Lic. # SPRINFP011LS

PROJECT: SPYGLASS HILL APARTMENTS
ADDRESS: 642 HIGHLAND AVE
CITY: BREMERTON, WA 98337
TITLE: FIRE PROTECTION SITE PLAN

Date: 07/30/15 Drawn: JGF PAGE 1 of 10

REVISIONS

DATE	BY	DESCRIPTION

GENERAL CONTRACTOR: RUSH COMMERCIAL CONST., INC.
ADDRESS: 6622 WOLLOCHET DRIVE NW
CITY: GIG HARBOR, WA 98335
SUPER: TOM KENNEDY
JOB PHONE #: 253-514-9404

FIELD INSPECTIONS
NAME: CITY OF BREMERTON
PHONE #: MIKE SIX (360)473-5386

STANDARD SYMBOLS

	Pipe Coupling
	Pipe Drop
	Pipe Riser
	Pipe Cap
	2-WAY EARTHQUAKE BRACE
	4-WAY EARTHQUAKE BRACE
	PIPE HANGER
	Hydraulic Reference Points
[ø in]	Elev. Below Top of Steel
[ø+ø]	Elev. Above Finished Floor
[ø-ø]	Ceiling Height

WA. STATE LEVEL 3 STAMP

WASHINGTON STATE
CERTIFICATE OF COMPETENCY
FIRE PROTECTION SPRINKLER SYSTEMS
Joseph G. Faulkner
9491-0999-CEG Level 3
Sprinx Fire Protection, Inc.
SPRINFP011LS
Date
Expires 3/31/16
Signature

N

SCALE: 1/8" = 1'-0"

FP-1.0

FILE: Spyglass Apt FP.dwg

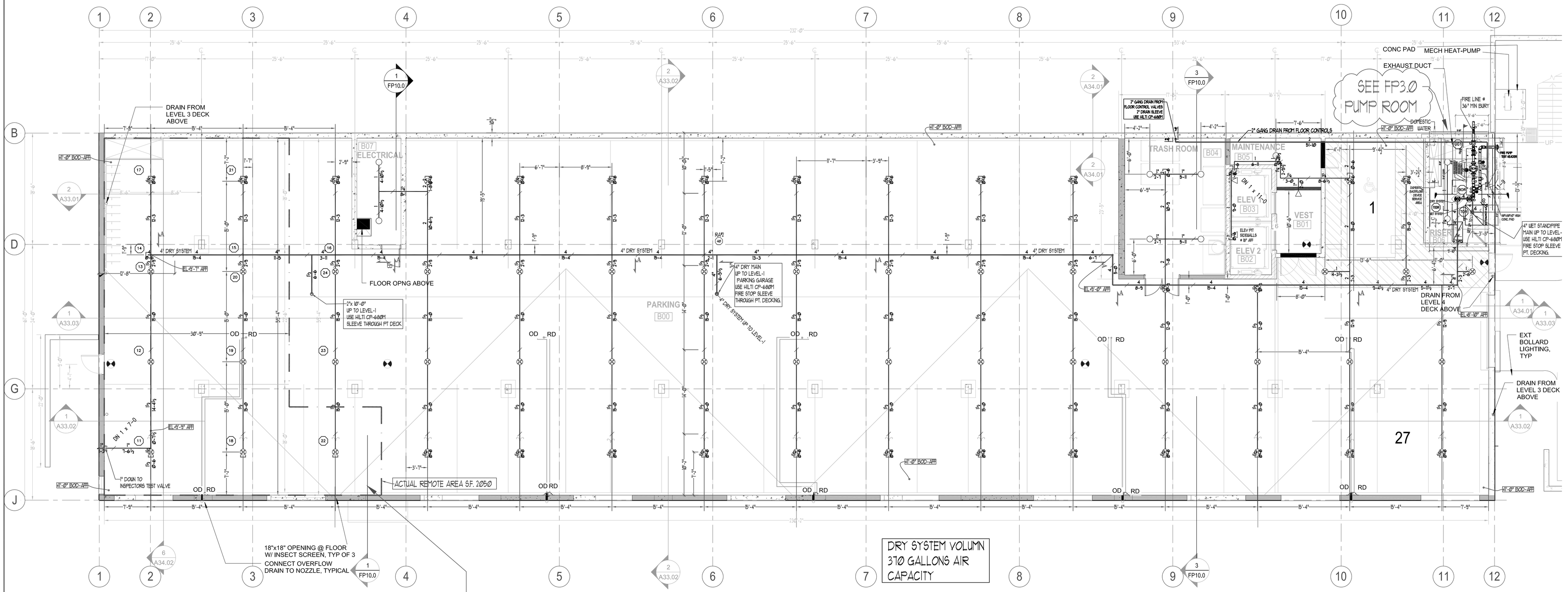

LEVEL BASEMENT - FIRE SPRINKLER PLAN

SCALE=1/8"=1'-0"

PLAN NORTH

HYDRAULIC DESIGN INFORMATION							
AREA NUMBER 1	CODE NFPA 13		HAZARD ORDHAZ. GP-1			SYSTEM TYPE DRY	
REMOTE AREA SQ. FT. 1950	DENSITY GPM/SQ. FT. 0.15	INSIDE HOSE ALLOWANCE 0		OUTSIDE HOSE ALLOWANCE 250		AREA PER SPRINKLER 256	
TOTAL SYSTEM REQUIREMENTS:	8.33 PSI @ 646.17 GPM AT WATER MAIN TAP						

Hydraulically Calculated System

This system as shown on	SPRINX FIRE PROT
company print no	FP-2.0 dated 07/30/15
for	SPYGLASS HILL APARTMENTS
at	RA #1 BMST PARKING contract no 21218
is designed to discharge at a rate of	.15 GPM
(Lmin) per sq ft (m2) of floor area over a maximum area of	
	1950 sq ft (m2) when supplied
with water at the rate of	396.18 GPM (L/min)
at	33.3 psi (bars) at the base of the riser
Hose stream allowance of	250 GPM (L/min)
is included in the above.	
Occupancy Classification	ORD. HAZ GP1
Commodity Classification	N/A
Maximum Storate Height	N/A
Installed By:	SPRINX FIRE PROTECTION, INC.

INSULATION CONTRACTOR TO MAINTAIN 1" CLEARANCE BETWEEN THE UPRIGHT FIRE SPRINKLER HEAD DEFLECTORS AND THE BOTTOM OF THE INSULATION. REFER TO OBSTRUCTION CHART IF INSULATION IS INSTALLED BELOW THE SPRINKLER DEFLECTORS.

Notes:

1. SYSTEM TYPE: DRY SYSTEM THROUGHOUT BASEMENT PARKING GARAGE LEVEL & RESIDENTIAL AREAS ON LEVEL R1-R5 CPVC WET.
2. CONSTRUCTION TYPE: NON-COMBUSTIBLE FOR BASEMENT LEVEL, COMBUSTIBLE FOR LEVELS 1-5
3. SPRINKLER SYSTEM DESIGNED, INSTALLED, BRACED AND TESTED PER NFPA-13 (2010)
4. ALL MATERIAL SHALL BE NEW AND U.L. LISTED AND F.M. APPROVED.
5. IN LOCALITIES SUBJECT TO FREEZING CONDITIONS, IT IS THE CONTRACTORS & OWNERS RESPONSIBILITY TO INSULATE WET SYSTEMS PROPERLY & TO PROVIDE HEAT THROUGHOUT THE WET PIPE SPRINKLER AREAS AND IN ENCLOSURES FOR DRY PIPE, DELUGE AND OTHER TYPES OF VALVE CONTROLLING WATER SUPPLIES TO SPRINKLER SYSTEMS.
6. SPRINX FIRE PROTECTION SHALL NOT BE RESPONSIBLE FOR THE ABILITY OF THE STRUCTURE TO ADEQUATELY SUPPORT THE FIRE SPRINKLER SYSTEM OR ANY APPURTENANCES THEREOF.
7. ALL ELECTRICAL, PAINTING, FURRING, CUTTING OR PATCHING TO BE BY OTHERS.
8. PIPE SIZING PER NFPA-13 (2010), SYSTEM HYDRAULICALLY CALCULATED.
9. EARTHQUAKE BRACING PER NFPA-13 (2010).
10. ONLY NEW SPRINKLERS SHALL BE EMPLOYED IN THE INSTALLATION OF THE SPRINKLER SYSTEM.
11. A STOCK OF SPARE SPRINKLERS OF EACH STYLE, TYPE, AND TEMP. RATING ALONG WITH A SPRINKLER HEAD WRENCH SHALL BE LOCATED AT THE MAIN RISER.
12. ALL DRY MAIN PIPING 2½" - 4" IN SIZE TO BE ALLIED DYNAFLOW THINWALL PIPE. ALL MAIN PIPING TO HAVE GROOVED FITTINGS WITH WELDED OUTLETS
13. ALL DRY LINE PIPING 1½" & 2" TO BE ALLIED DYNAFLOW THINWALL PIPE, ALL 1" - 1¼" SIZES TO BE SCH-40 PIPE, WITH CAST OR DUCTILE IRON THREADED FITTINGS.
14. SLOPE ALL DRY MAIN PIPING A MINIMUM ¼" PER 10'-0", SLOPE ALL DRY SYSTEM LINES A MINIMUM ½" PER 10'-0".
15. LINE PIPE HANGERS TO BE HILTI DROP-IN OR CAST IN ANCHORS, ROD AND RINGS.
16. MAIN PIPE HANGERS TO BE HILTI DROP-IN ANCHORS, OR CAST-IN HCI-WF, ROD AND RINGS. (SEE HANGER DETAILS)

OBSTRUCTION CHART ALSO APPLIES TO CEILING INSULATION OBSTRUCTIONS

EXTEDED COVERAGE SPRINKLER OBSTRUCTION

DISTANCE FROM SPRINKLERS TO SIDE OF OBSTRUCTION	*MAXIMUM ALLOWABLE DISTANCE OF DEFLECTOR ABOVE BOTTOM OF OBSTRUCTION*
DISTANCE FROM SPRINKLER TO SIDE OF OBSTRUCTION	MAXIMUM ALLOWABLE DISTANCE DEFLECTOR ABOVE BOTTOM OF OBSTRUCTION
"A" DIM	"B" DIM
1'-0"	1"
3'-0"	3"
4'-0"	5"
4'-6"	7"
6'-0"	9"
6'-6"	11"
7'-0"	14"

OBST-EXCOV.DWG

MAXIMUM DISTANCE BETWEEN HANGERS (FT.-IN)								
	1"	1¼"	1½"	2"	2½"	3"	4"	6"
STEEL PIPE-	12-0	12-0	15-0	15-0	15-0	15-0	15-0	15-0
LIGHTWALL STEEL THREADABLE	12-0	12-0	12-0	12-0	12-0	12-0		

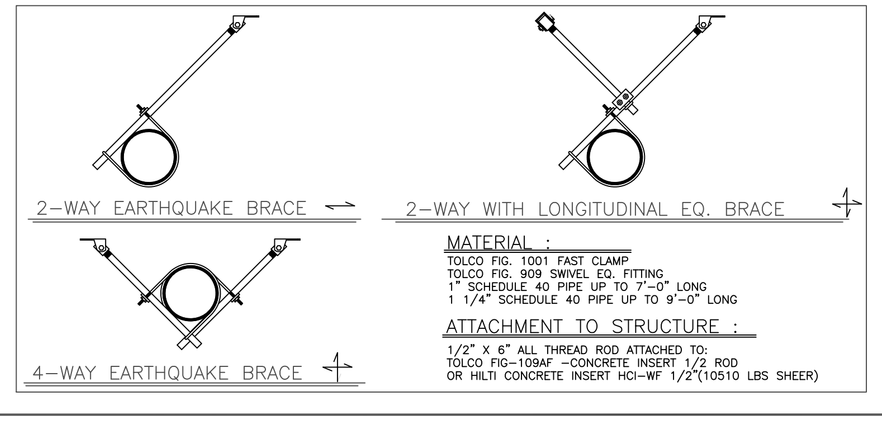

MATERIAL :
TOLCO FIG. 1001 FAST CLAMP
TOLCO FIG. 909 SWIVEL EQ. FITTING
1" SCHEDULE 40 PIPE UP TO 7'-0" LONG
1 1/4" SCHEDULE 40 PIPE UP TO 9'-0" LONG

ATTACHMENT TO STRUCTURE :
1/2" X 6" ALL THREAD ROD ATTACHED TO:
TOLCO FIG-109AF -CONCRETE INSERT 1/2 ROD
OR HILTI CONCRETE INSERT HCI-WF 1/2"(10510 LBS SHEER)

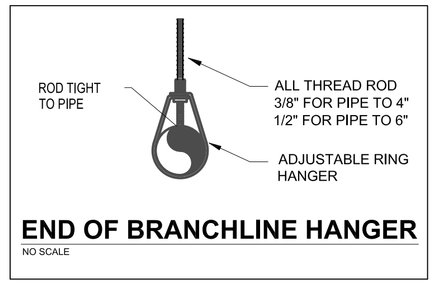

END OF BRANCHLINE HANGER

NO SCALE

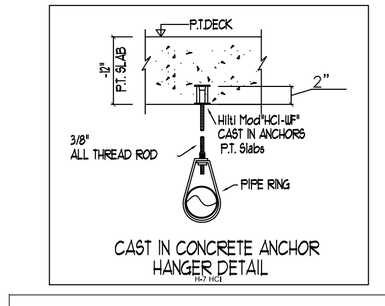

CAST IN CONCRETE ANCHOR HANGER DETAIL

NO SCALE

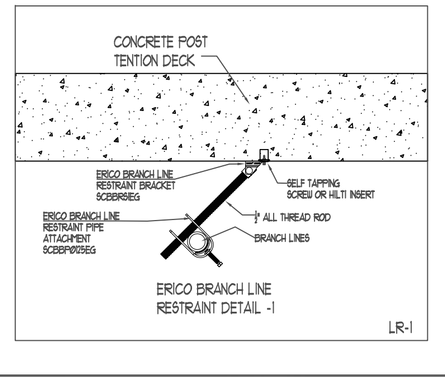

ERICO BRANCH LINE RESTRAINT DETAIL -I

LR-I

Sprinkler Head Schedule					
Symbol	Count	Thread	K-Factor	Description	Note
○	9	1/2"	5.6	HEAD2- TYCO TY313 TY-FRB BRASS UPRIGHT 155 DEG.	
⊗	59	3/4"	11.2	HEAD4- TYCO TY5137 EC-11 EX. COVERAGE UPRIGHT BRASS 155 DEG	
◁	1	1/2"	5.6	SIDE2- TYCO TY3331 TY-FRB QR HORZ. SIDEWALL WHITE 155 DET.	
69 = Total Number of Heads BASEMENT					

PROJECT: SPYGLASS HILL APARTMENTS
ADDRESS: 642 HIGHLAND AVE
CITY: BREMERTON, WA 98337
TITLE: FIRE PROTECTION PLAN SPYGLASS BASEMENT

SPRINX FIRE PROTECTION
A Fire Sprinkler Corporation
Contr Lic.# SPRINFP011LS
EST 1999

2709 JAHN AVE. NW, SUITE H2
Gig Harbor, WA. 98335-1735
Phone 253.853.7780
Fax 253.853.3890

Date: 07/30/15 | Drawn: JGF | PAGE 2 of 10

REVISIONS

DATE	DESCRIPTION	BY

GENERAL CONTRACTOR: RUSH COMMERCIAL CONST., INC.
ADDRESS: 6622 WOLLOCHET DRIVE NW
CITY: GIG HARBOR, WA 98335
SUPER: TOM KENNEDY
JOB PHONE #: 253-514-9404

FIELD INSPECTIONS

NAME: CITY OF BREMERTON
PHONE #: MIKE SIX (360)473-5386

STANDARD SYMBOLS

Pipe Coupling
Pipe Drop
Pipe Riser
Pipe End Cap
2"-WAY EARTHQUAKE BRACE
4"-WAY EARTHQUAKE BRACE
PIPE HANGER
Hydraulic Reference Points
Elev. Below Top of Steel
Elev. Above Finished Floor
o/c=Ceiling Height

WA. STATE LEVEL 3 STAMP

WASHINGTON STATE
CERTIFICATE OF COMPETENCY
FIRE PROTECTION SPRINKLER SYSTEMS
Joseph G. Faulkner
9491-0699-CEG Level 3
Sprinx Fire Protection, Inc.
SPRINFP011LS
Expires 12/31/16
Signature

N

SCALE: 1/8" = 1'-0"

FP-2.0

FILE: Spyglass Apt FP.dwg

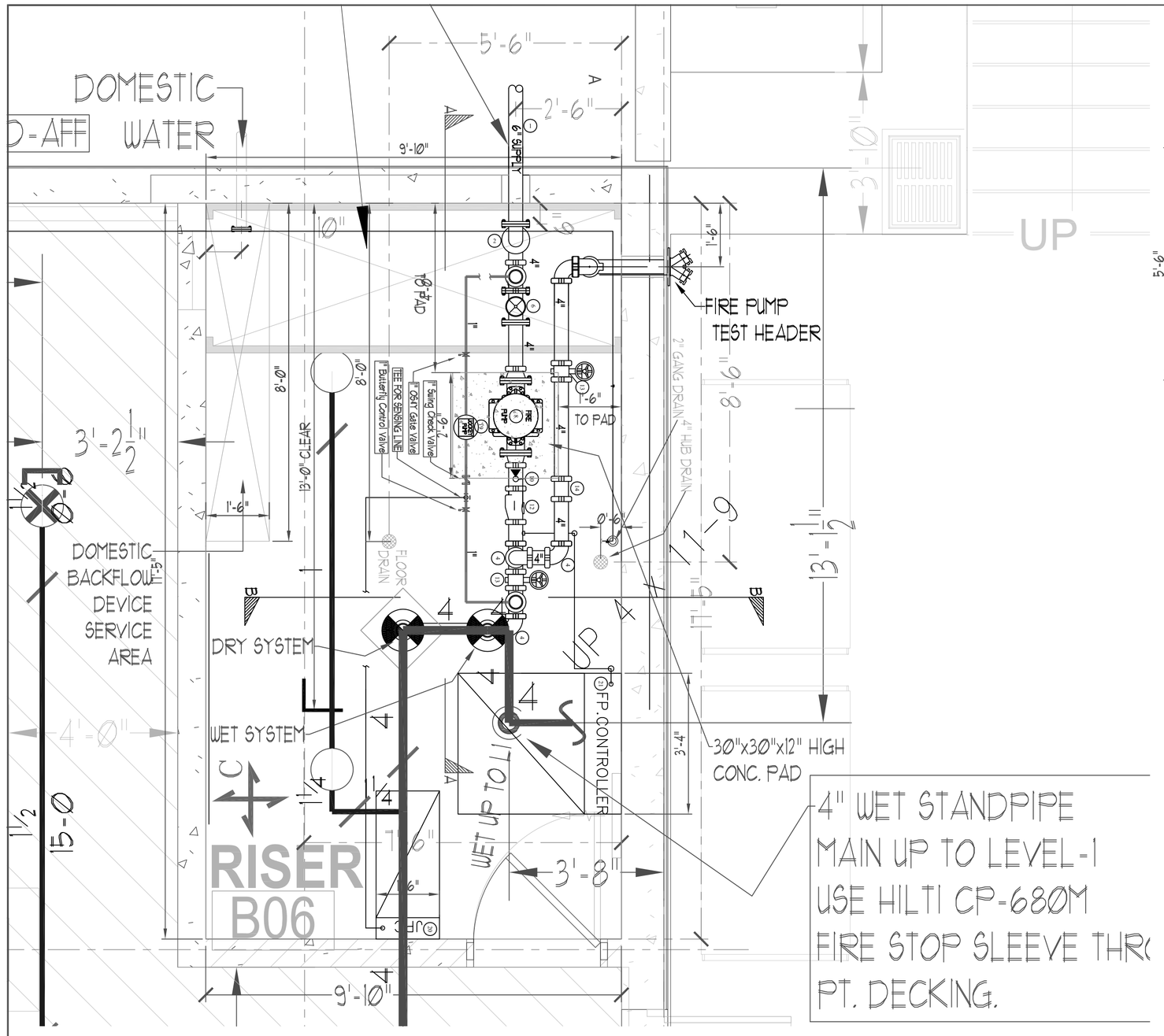

PLAN NORTH

LEVEL BASEMENT - FIRE SPRINKLER PUMP ROOM PLAN

SCALE=1/2"=1'-0"

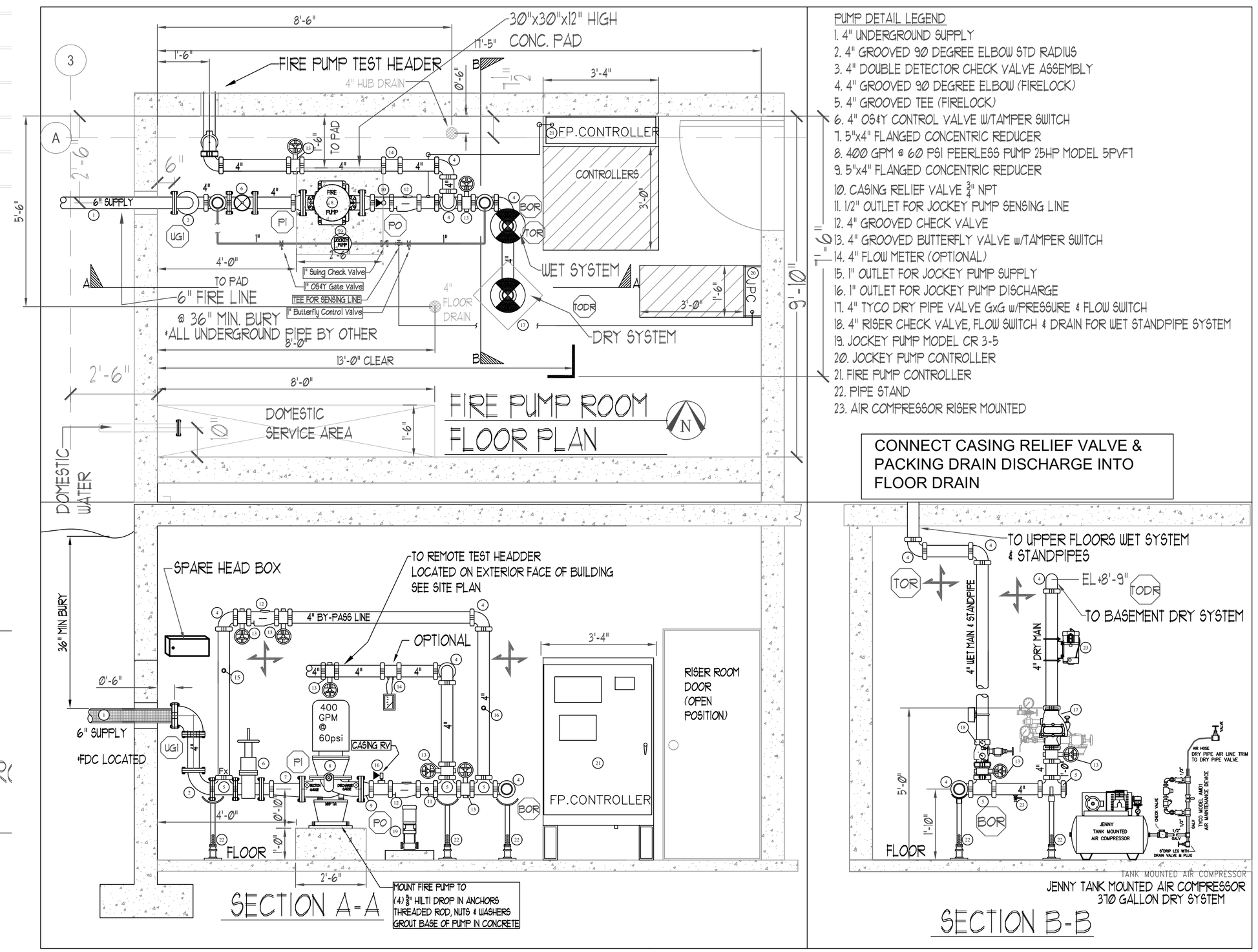

PUMP DETAIL LEGEND

1. 4" UNDERGROUND SUPPLY
2. 4" GROOVED 90 DEGREE ELBOW STD RADIUS
3. 4" DOUBLE DETECTOR CHECK VALVE ASSEMBLY
4. 4" GROOVED 90 DEGREE ELBOW (FIRELOCK)
5. 4" GROOVED TEE (FIRELOCK)
6. 4" OS&Y CONTROL VALVE W/TAMPER SWITCH
7. 5"x4" FLANGED CONCENTRIC REDUCER
8. 400 GPM @ 60 PSI PEERLESS PUMP 25HP MODEL 5PVF1
9. 5"x4" FLANGED CONCENTRIC REDUCER
10. CASING RELIEF VALVE 2" NPT
11. 1/2" OUTLET FOR JOCKEY PUMP SENSING LINE
12. 4" GROOVED CHECK VALVE
13. 4" GROOVED BUTTERFLY VALVE w/TAMPER SWITCH
14. 4" FLOW METER (OPTIONAL)
15. 1" OUTLET FOR JOCKEY PUMP SUPPLY
16. 1" OUTLET FOR JOCKEY PUMP DISCHARGE
17. 4" TYCO DRY PIPE VALVE GxG w/PRESSURE & FLOW SWITCH
18. 4" RISER CHECK VALVE, FLOW SWITCH & DRAIN FOR WET STANDPIPE SYSTEM
19. JOCKEY PUMP MODEL CR 3-5
20. JOCKEY PUMP CONTROLLER
21. FIRE PUMP CONTROLLER
22. PIPE STAND
23. AIR COMPRESSOR RISER MOUNTED

CONNECT CASING RELIEF VALVE & PACKING DRAIN DISCHARGE INTO FLOOR DRAIN

SECTION A-A

JENNY TANK MOUNTED AIR COMPRESSOR
370 GALLON DRY SYSTEM

SECTION B-B

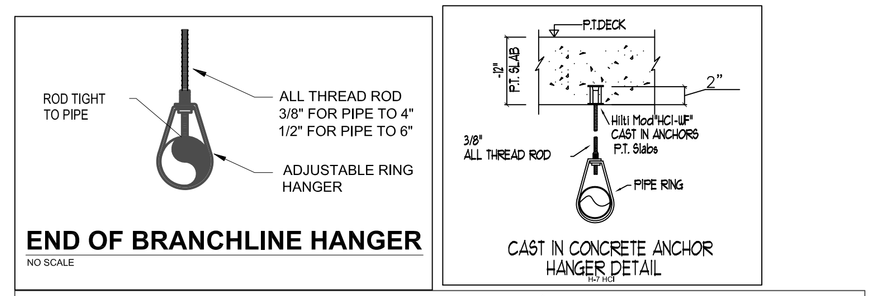

END OF BRANCHLINE HANGER

NO SCALE

CAST IN CONCRETE ANCHOR
HANGER DETAIL

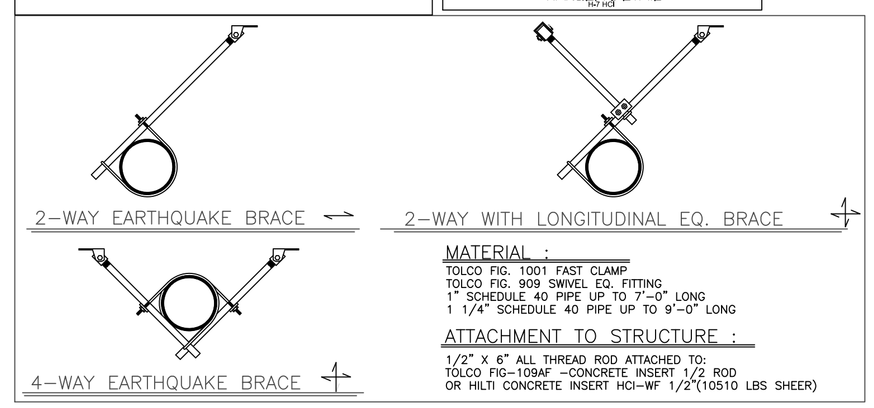

MATERIAL :
TOLCO FIG. 1001 FAST CLAMP
TOLCO FIG. 909 SWIVEL EQ. FITTING
1" SCHEDULE 40 PIPE UP TO 7'-0" LONG
1 1/4" SCHEDULE 40 PIPE UP TO 9'-0" LONG

ATTACHMENT TO STRUCTURE :
1/2" X 6" ALL THREAD ROD ATTACHED TO:
TOLCO FIG-109AF --CONCRETE INSERT 1/2 ROD
OR HILTI CONCRETE INSERT HCI-WF 1/2"(10510 LBS SHEER)

MAXIMUM DISTANCE BETWEEN HANGERS (FT.-IN)

	1"	1¼"	1½"	2"	2½"	3"	4"	6"
STEEL PIPE-	12-0	12-0	15-0	15-0	15-0	15-0	15-0	15-0
LIGHTWALL STEEL THREADABLE	12-0	12-0	12-0	12-0	12-0	12-0		

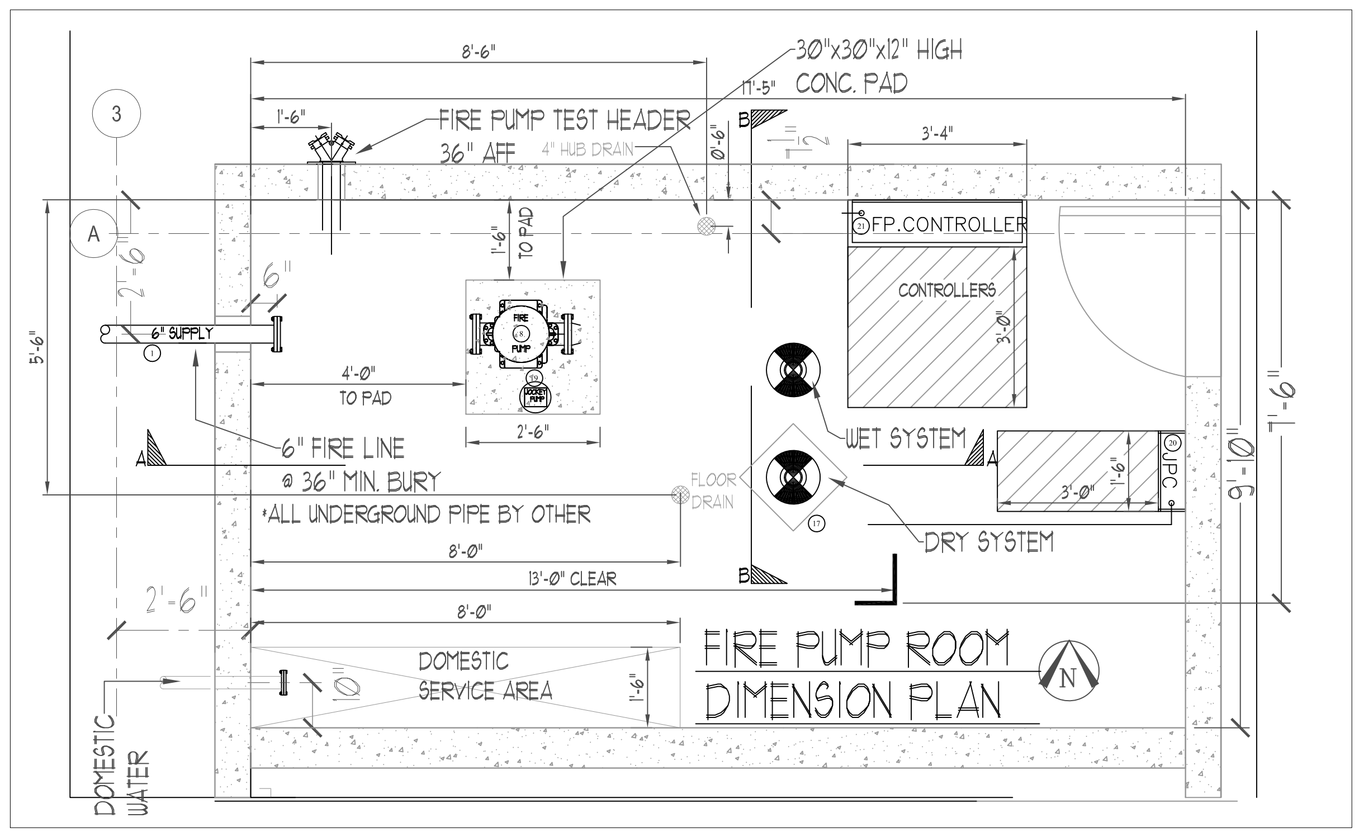

PLAN NORTH

LEVEL BASEMENT - FIRE SPRINKLER PUMP ROOM DIMENSION PLAN

SCALE=1/2"=1'-0"

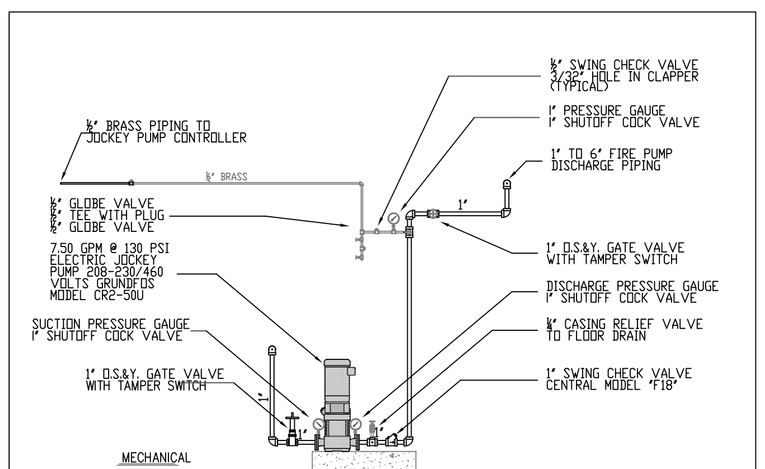

JOCKEY PUMP PIPING

PROJECT: SPYGLASS HILL APARTMENTS
ADDRESS: 642 HIGHLAND AVE
CITY: BREMERTON, WA 98337
TITLE: FIRE PROTECTION PLAN SPYGLASS PUMP ROOM

SPRINX FIRE PROTECTION
2709 JAHN AVE. NW, SUITE H2
Gig Harbor, WA. 98335-1735
Phone 253.853.7780
Fax 253.853.3890
EST. 1999

A Fire Sprinkler Corporation
Cont Lic.# SPRINFP011LS

Date: 07/30/15 | Drawn: JGF | PAGE 3 of 10

REVISIONS

DATE	DESCRIPTION	BY

GENERAL: RUSH COMMERCIAL CONST., INC.
ADDRESS: 6622 WOLLOCHET DRIVE NW
CITY: GIG HARBOR, WA 98335
SUPER.: TOM KENNEDY
JOB PHONE #: 253-514-9404

FIELD INSPECTIONS

NAME	PHONE #
CITY OF BREMERTON	
MIKE SIX (360)473-5386	

STANDARD SYMBOLS

Pipe Coupling	
Pipe Drop	
Pipe Riser	
Pipe Cap	
Pipe End	
2-WAY EARTHQUAKE BRACE	
4-WAY EARTHQUAKE BRACE	
PIPE HANGER	
Hydraulic Reference Points	
Elev. Below Top of Steel	[18 ea]
Elev. Above Finished Floor	[4 ea]
c=Ceiling Height	

WA. STATE LEVEL 3 STAMP

WASHINGTON STATE
CERTIFICATE OF COMPETENCY
FIRE PROTECTION SPRINKLER SYSTEMS
Joseph G. Faulkner
9491-0699-CEG Level 3
Sprinx Fire Protection, Inc.
SPRINFP011LS
Date
Expires 12/31/15
Signature

SCALE: 1/8" = 1'-0"

FP-3.0

FILE: Spyglass Apt FP.dwg

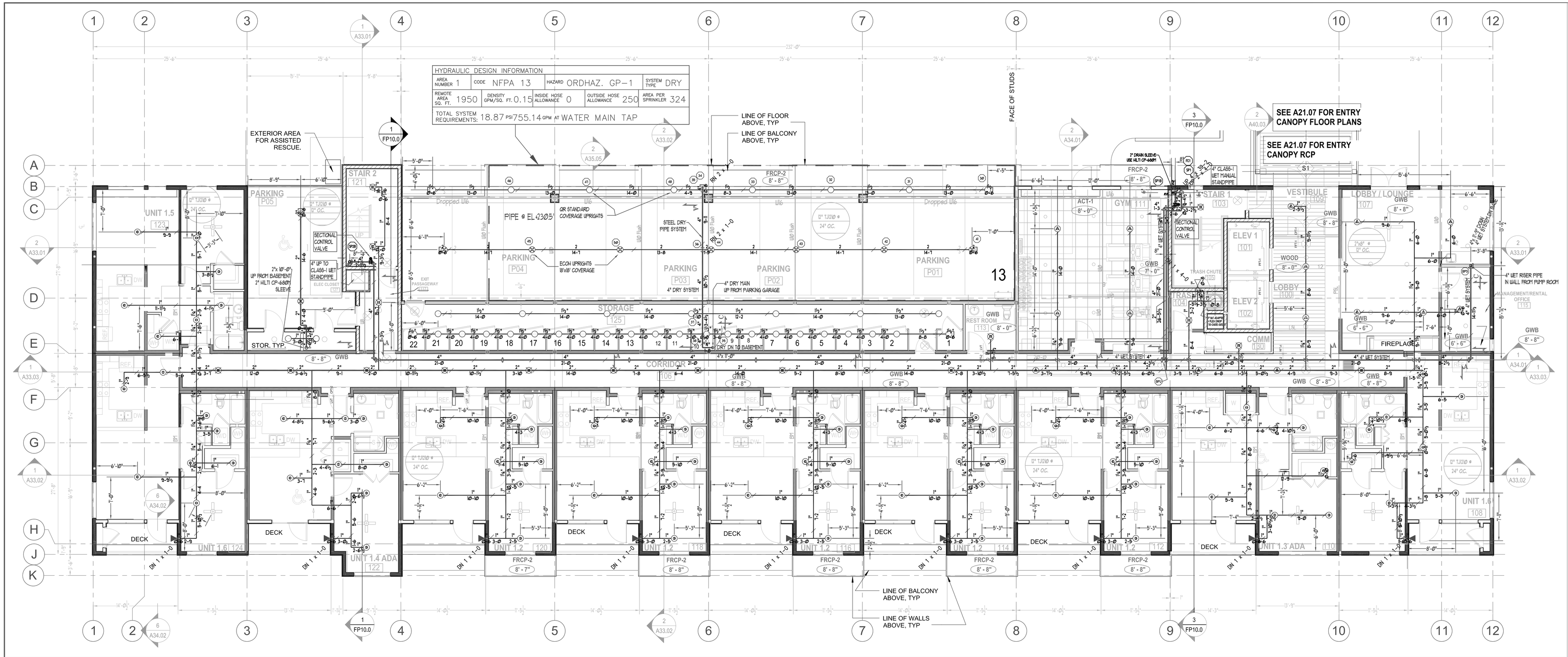

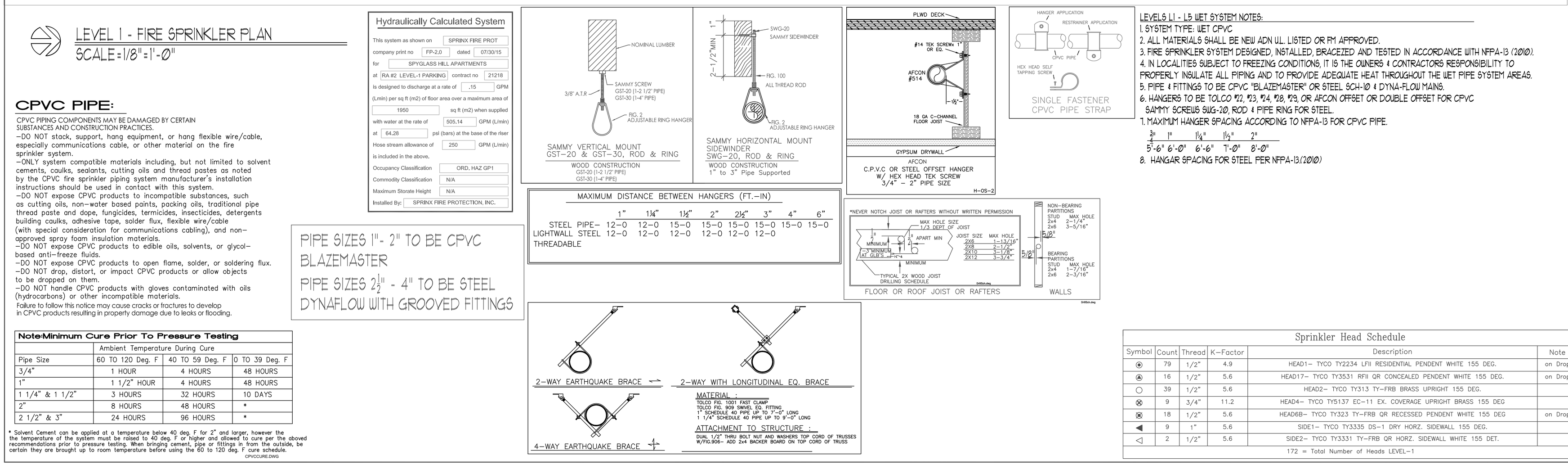

LEVEL 1 - FIRE SPRINKLER PLAN
SCALE=1/8"=1'-0"

CPVC PIPE:

CPVC PIPING COMPONENTS MAY BE DAMAGED BY CERTAIN SUBSTANCES AND CONSTRUCTION PRACTICES.
–DO NOT stack, support, hang equipment, or hang flexible wire/cable, especially communications cable, or other material on the fire sprinkler system.
–ONLY system compatible materials including, but not limited to solvent cements, caulks, sealants, cutting oils and thread pastes as noted by the CPVC fire sprinkler piping system manufacturer's installation instructions should be used in contact with this system.
–DO NOT expose CPVC products to incompatible substances, such as cutting oils, non–water based paints, packing oils, traditional pipe thread paste and dope, fungicides, termicides, insecticides, detergents building caulks, adhesive tape, solder flux, flexible wire/cable (with special consideration for communications cabling), and non–approved spray foam insulation materials.
–DO NOT expose CPVC products to edible oils, solvents, or glycol–based anti–freeze fluids.
–DO NOT expose CPVC products to open flame, solder, or soldering flux.
–DO NOT drop, distort, or impact CPVC products or allow objects to be dropped on them.
–DO NOT handle CPVC products with gloves contaminated with oils (hydrocarbons) or other incompatible materials.
Failure to follow this notice may cause cracks or fractures to develop in CPVC products resulting in property damage due to leaks or flooding.

Hydraulically Calculated System

This system as shown on	SPRINX FIRE PROT
company print no	FP-2.0 dated 07/30/15
for	SPYGLASS HILL APARTMENTS
at	RA #2 LEVEL-1 PARKING contract no 21218
is designed to discharge at a rate of	.15 GPM
(Lmin) per sq ft (m2) of floor area over a maximum area of	
	1950 sq ft (m2) when supplied
with water at the rate of	505.14 GPM (L/min)
at	64.28 psi (bars) at the base of the riser
Hose stream allowance of	250 GPM (L/min)
is included in the above.	
Occupancy Classification	ORD. HAZ GP1
Commodity Classification	N/A
Maximum Storate Height	N/A
Installed By:	SPRINX FIRE PROTECTION, INC.

PIPE SIZES 1"- 2" TO BE CPVC BLAZEMASTER
PIPE SIZES 2½" - 4" TO BE STEEL DYNAFLOW WITH GROOVED FITTINGS

Note:Minimum Cure Prior To Pressure Testing

	Ambient Temperature During Cure		
Pipe Size	60 TO 120 Deg. F	40 TO 59 Deg. F	0 TO 39 Deg. F
3/4"	1 HOUR	4 HOURS	48 HOURS
1"	1 1/2" HOUR	4 HOURS	48 HOURS
1 1/4" & 1 1/2"	3 HOURS	32 HOURS	10 DAYS
2"	8 HOURS	48 HOURS	*
2 1/2" & 3"	24 HOURS	96 HOURS	*

* Solvent Cement can be applied at a temperature below 40 deg. F for 2" and larger, however the the temperature of the system must be raised to 40 deg. F or higher and allowed to cure per the above recommendations prior to pressure testing. When bringing cement, pipe or fittings in from the outside, be certain they are brought up to room temperature before using the 60 to 120 deg. F cure schedule.
CPVCCURE.DWG

LEVELS L1 - L5 WET SYSTEM NOTES:
1. SYSTEM TYPE: WET CPVC
2. ALL MATERIALS SHALL BE NEW ADN U.L. LISTED OR FM APPROVED.
3. FIRE SPRINKLER SYSTEM DESIGNED, INSTALLED, BRACEIZED AND TESTED IN ACCORDANCE WITH NFPA-13 (2010).
4. IN LOCALITIES SUBJECT TO FREEZING CONDITIONS, IT IS THE OWNERS & CONTRACTORS RESPONSIBILITY TO PROPERLY INSULATE ALL PIPING AND TO PROVIDE ADEQUATE HEAT THROUGHOUT THE WET PIPE SYSTEM AREAS.
5. PIPE & FITTINGS TO BE CPVC "BLAZEMASTER" OR STEEL SCH-10 & DYNA-FLOW MAINS.
6. HANGERS TO BE TOLCO #22, #23, #24, #28, #29, OR AFCON OFFSET OR DOUBLE OFFSET FOR CPVC SAMMY SCREWS SWG-20, ROD & PIPE RING FOR STEEL.
7. MAXIMUM HANGER SPACING ACCORDING TO NFPA-13 FOR CPVC PIPE.

¾"	1"	1¼"	1½"	2"
5'-6"	6'-0"	6'-6"	7'-0"	8'-0"

8. HANGAR SPACING FOR STEEL PER NFPA-13(2010)

MAXIMUM DISTANCE BETWEEN HANGERS (FT.–IN)

	1"	1¼"	1½"	2"	2½"	3"	4"	6"
STEEL PIPE–	12–0	12–0	15–0	15–0	15–0	15–0	15–0	15–0
LIGHTWALL STEEL	12–0	12–0	12–0	12–0	12–0	12–0		
THREADABLE								

Sprinkler Head Schedule

Symbol	Count	Thread	K–Factor	Description	Note
⊙	79	1/2"	4.9	HEAD1– TYCO TY2234 LFII RESIDENTIAL PENDENT WHITE 155 DEG.	on Drop
⊙	16	1/2"	5.6	HEAD17– TYCO TY3531 RFII QR CONCEALED PENDENT WHITE 155 DEG.	on Drop
○	39	1/2"	5.6	HEAD2– TYCO TY313 TY–FRB BRASS UPRIGHT 155 DEG.	
⊗	9	3/4"	11.2	HEAD4– TYCO TY5137 EC–11 EX. COVERAGE UPRIGHT BRASS 155 DEG	
⊠	18	1/2"	5.6	HEAD6B– TYCO TY323 TY–FRB QR RECESSED PENDENT WHITE 155 DEG	on Drop
◀	9	1"	5.6	SIDE1– TYCO TY3335 DS–1 DRY HORZ. SIDEWALL 155 DEG.	
◁	2	1/2"	5.6	SIDE2– TYCO TY3331 TY–FRB QR HORZ. SIDEWALL WHITE 155 DET.	
				172 = Total Number of Heads LEVEL–1	

PROJECT: SPYGLASS HILL APARTMENTS
ADDRESS: 642 HIGHLAND AVE
CITY: BREMERTON, WA 98337
TITLE: FIRE PROTECTION PLAN SPYGLASS LEVEL 1

REVISIONS
DATE | DESCRIPTION | BY

SPRINX FIRE PROTECTION
A Fire Sprinkler Corporation
Contr Lic # SPRINFP011LS
2709 JAHN AVE. NW, SUITE H2
Gig Harbor, WA. 98335-1735
Phone 253.853.7780
Fax 253.853.3890
EST. 1999

Date: 07/30/15 | Drawn: JGF | PAGE 4 of 10

GENERAL: RUSH COMMERCIAL CONST., INC.
ADDRESS: 6622 WOLLOCHET DRIVE NW
CITY: GIG HARBOR, WA 98335
SUPER.: TOM KENNEDY
JOB PHONE #: 253-514-9404
FIELD INSPECTIONS
NAME: CITY OF BREMERTON
PHONE #: MIKE SIX (360)473-5386

STANDARD SYMBOLS
Pipe Coupling
Pipe Elbow
Pipe Riser
Pipe Cap
Pipe Reducer
2–WAY EARTHQUAKE BRACE
4–WAY EARTHQUAKE BRACE
PIPE HANGER
Hydraulic Reference Points [18 m3]
Elev. Below Top of Steel [E+4]
Elev. Above Finished Floor [0=Ceiling Height]

WA. STATE LEVEL 3 STAMP

WASHINGTON STATE CERTIFICATE OF COMPETENCY FIRE PROTECTION SPRINKLER SYSTEMS
Joseph G. Faulkner
9491-0699-CEG Level 3
Sprinx Fire Protection, Inc.
SPRINFP011LS
Signature
Expires 12/31/15
Date

N
SCALE: 1/8" = 1'-0"

FP-4.0
FILE: Spyglass Apt FP.dwg

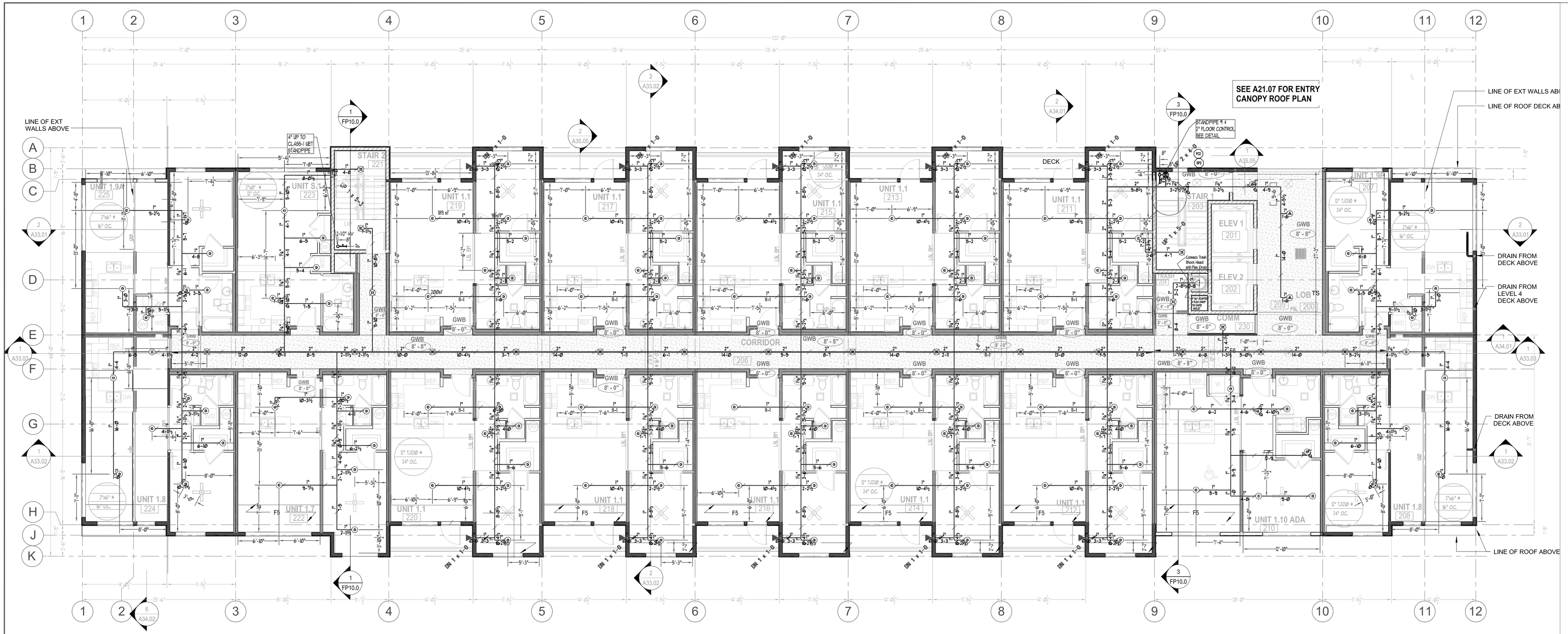

LEVEL 2 - FIRE SPRINKLER PLAN

SCALE: 1/8" = 1'-0"

PLAN NORTH

LEVELS L1 - L5 WET SYSTEM NOTES:

1. SYSTEM TYPE: WET CPVC TREE SYSETM
2. ALL MATERIALS SHALL BE NEW AND UL LISTED OR FM APPROVED.
3. FIRE SPRINKLER SYSTEM DESIGNED, INSTALLED, BRACED AND TESTED IN ACCORDANCE WITH NFPA-13 (2010).
4. IN LOCALITIES SUBJECT TO FREEZING CONDITIONS, IT IS THE OWNERS & CONTRACTORS RESPONSIBILITY TO PROPERLY INSULATE ALL PIPING AND TO PROVIDE ADEQUATE HEAT THROUGHOUT THE WET PIPE SYSTEM AREAS.
5. PIPE & FITTINGS TO BE CPVC "BLAZEMASTER" OR STEEL SCH-10 & DYNA-FLOW MAINS.
6. HANGERS TO BE TOLCO #2, #3, #24, #28, #29, OR AFCON OFFSET OR DOUBLE OFFSET FOR CPVC SAMMY SCREWS SWG-20, ROD & PIPE RING FOR STEEL.
7. MAXIMUM HANGER SPACING ACCORDING TO NFPA-13 FOR CPVC PIPE.

3/4"	1"	1¼"	1½"	2"
5'-6"	6'-0"	6'-6"	7'-0"	8'-0"

8. HANGAR SPACING FOR STEEL PER NFPA-13(2010)

CPVC PIPE:

CPVC PIPING COMPONENTS MAY BE DAMAGED BY CERTAIN SUBSTANCES AND CONSTRUCTION PRACTICES.

–DO NOT stack, support, hang equipment, or hang flexible wire/cable, especially communications cable, or other material on the fire sprinkler system.

–ONLY system compatible materials including, but not limited to solvent cements, caulks, sealants, cutting oils and thread pastes as noted by the CPVC fire sprinkler piping system manufacturer's installation instructions should be used in contact with this system.

–DO NOT expose CPVC products to incompatible substances, such as cutting oils, non–water based paints, packing oils, traditional pipe thread paste and dope, fungicides, termicides, insecticides, detergents building caulks, adhesive tape, solder flux, flexible wire/cable (with special consideration for communications cabling), and non–approved spray foam insulation materials.

–DO NOT expose CPVC products to edible oils, solvents, or glycol–based anti–freeze fluids.

–DO NOT expose CPVC products to open flame, solder, or soldering flux.

–DO NOT drop, distort, or impact CPVC products or allow objects to be dropped on them.

–DO NOT handle CPVC products with gloves contaminated with oils (hydrocarbons) or other incompatible materials.

Failure to follow this notice may cause cracks or fractures to develop in CPVC products resulting in property damage due to leaks or flooding.

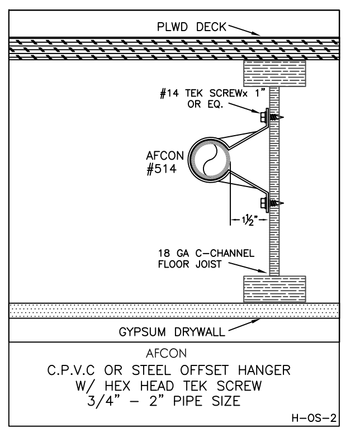

PIPE SIZES 1"- 2" TO BE CPVC BLAZEMASTER

PIPE SIZES 2½" - 4" TO BE STEEL DYNAFLOW WITH GROOVED FITTINGS

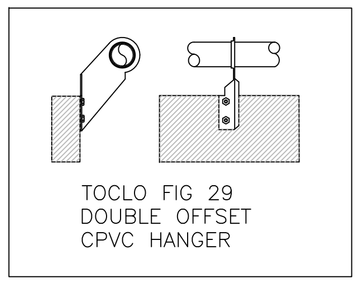

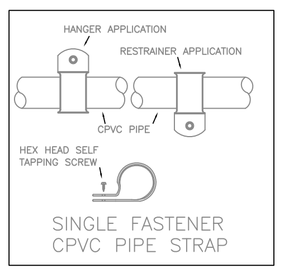

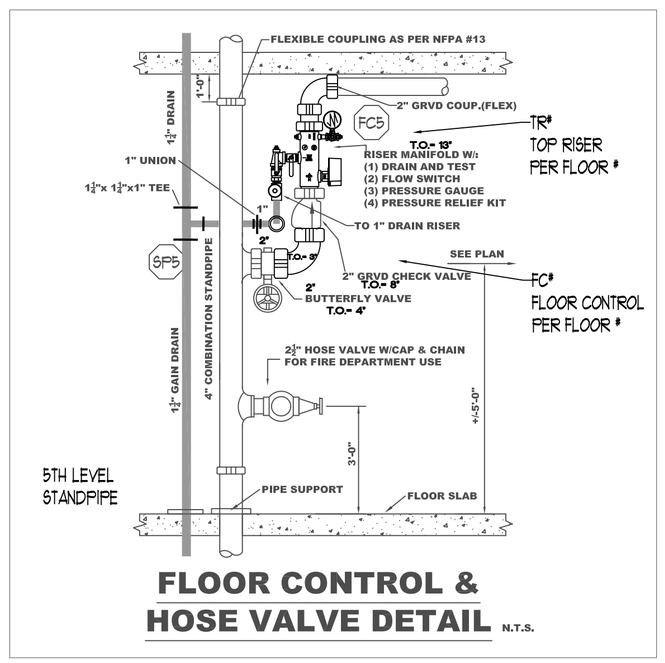

Note:Minimum Cure Prior To Pressure Testing			
	Ambient Temperature During Cure		
Pipe Size	60 TO 120 Deg. F	40 TO 59 Deg. F	0 TO 39 Deg. F
3/4"	1 HOUR	4 HOURS	48 HOURS
1"	1 1/2" HOUR	4 HOURS	48 HOURS
1 1/4" & 1 1/2"	3 HOURS	32 HOURS	10 DAYS
2"	8 HOURS	48 HOURS	*
2 1/2" & 3"	24 HOURS	96 HOURS	*

* Solvent Cement can be applied at a temperature below 40 deg. F for 2" and larger, however the the temperature of the system must be raised to 40 deg. F or higher and allowed to cure per the above recommendations prior to pressure testing. When bringing cement, pipe or fittings in from the outside, be certain they are brought up to room temperature before using the 60 to 120 deg. F cure schedule.

CPVCCURE.DWG

BLAZEMASTER 2000 PIPE SDR 13.5 (ASTM F442) HANGER SPACING			
NOMINAL SIZE inches	(mm)	MAX SPACING feet	(m)
3/4"	(20.0)	5.5'	(1.7)
1"	(25.0)	6.0'	(1.8)
1–1/4"	(32.0)	6.5'	(2.0)
1–1/2"	(40.0)	7.0'	(2.1)
2"	(50.0)	8.0'	(2.4)
2–1/2"	(65.0)	9.0'	(2.7)
3"	(80.0)	10.0'	(3.0)

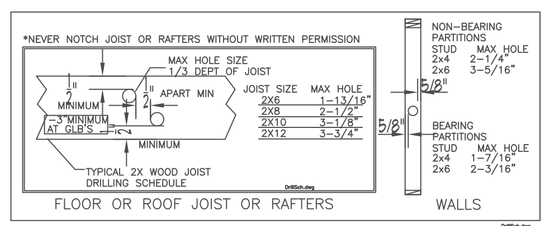

Sprinkler Head Schedule					
Symbol	Count	Thread	K–Factor	Description	Note
⊙	131	1/2"	4.9	HEAD1– TYCO TY2234 LFII RESIDENTIAL PENDENT WHITE 155 DEG.	on Drop
⊙	3	1/2"	5.6	HEAD17– TYCO TY3531 RFII QR CONCEALED PENDENT WHITE 155 DEG.	on Drop
⊗	22	1/2"	5.6	HEAD6B– TYCO TY323 TY–FRB QR RECESSED PENDENT WHITE 155 DEG	on Drop
◀	10	1"	5.6	SIDE1– TYCO TY3335 DS–1 DRY HORZ. SIDEWALL 155 DEG.	
◁	1	1/2"	5.6	SIDE2– TYCO TY3331 TY–FRB QR HORZ. SIDEWALL WHITE 155 DET.	
167 = Total Number of Heads LEVEL–2					

PROJECT: SPYGLASS HILL APARTMENTS
ADDRESS: 642 HIGHLAND AVE
CITY: BREMERTON, WA 98337
TITLE: FIRE PROTECTION PLAN SPYGLASS LEVEL 2

SPRINX FIRE PROTECTION
A Fire Sprinkler Corporation
Contr Lic.# SPRINFP011LS
2709 JAHN AVE. NW, SUITE H2
Gig Harbor, WA. 98335-1735
Phone 253.853.7780
Fax 253.853.3890
EST. 1999

Date: 07/30/15 Drawn: JGF PAGE 5 of 10

REVISIONS

DATE	DESCRIPTION	BY

GENERAL CONTRACTOR: RUSH COMMERCIAL CONST., INC.
ADDRESS: 6622 WOLLOCHET DRIVE NW
CITY: GIG HARBOR, WA 98335
SUPER.: TOM KENNEDY
JOB PHONE #: 253-514-9404

FIELD INSPECTIONS

NAME	PHONE #
CITY OF BREMERTON	
MIKE SIX	(360)473-5386

STANDARD SYMBOLS

Pipe Coupling	
Pipe Riser	
Pipe Drop	
Pipe Cap	
Pipe Bend	
2–WAY EARTHQUAKE BRACE	
4–WAY EARTHQUAKE BRACE	
PIPE HANGER	
Hydraulic Reference Points	
Elev. Below Top of Steel	[18 Ms]
Elev. Above Finished Floor	[E+6]
⊙–Ceiling Height	

WA. STATE LEVEL 3 STAMP

WASHINGTON STATE CERTIFICATE OF COMPETENCY FIRE PROTECTION SPRINKLER SYSTEMS
Joseph G. Faulkner
9491-0699-CEG Level 3
Sprinx Fire Protection, Inc.
SPRINFP011LS
Date
Expires 12/31/15
Signature

SCALE: 1/8" = 1'-0"

FP-5.0

FILE: Spyglass Apt FP.dwg

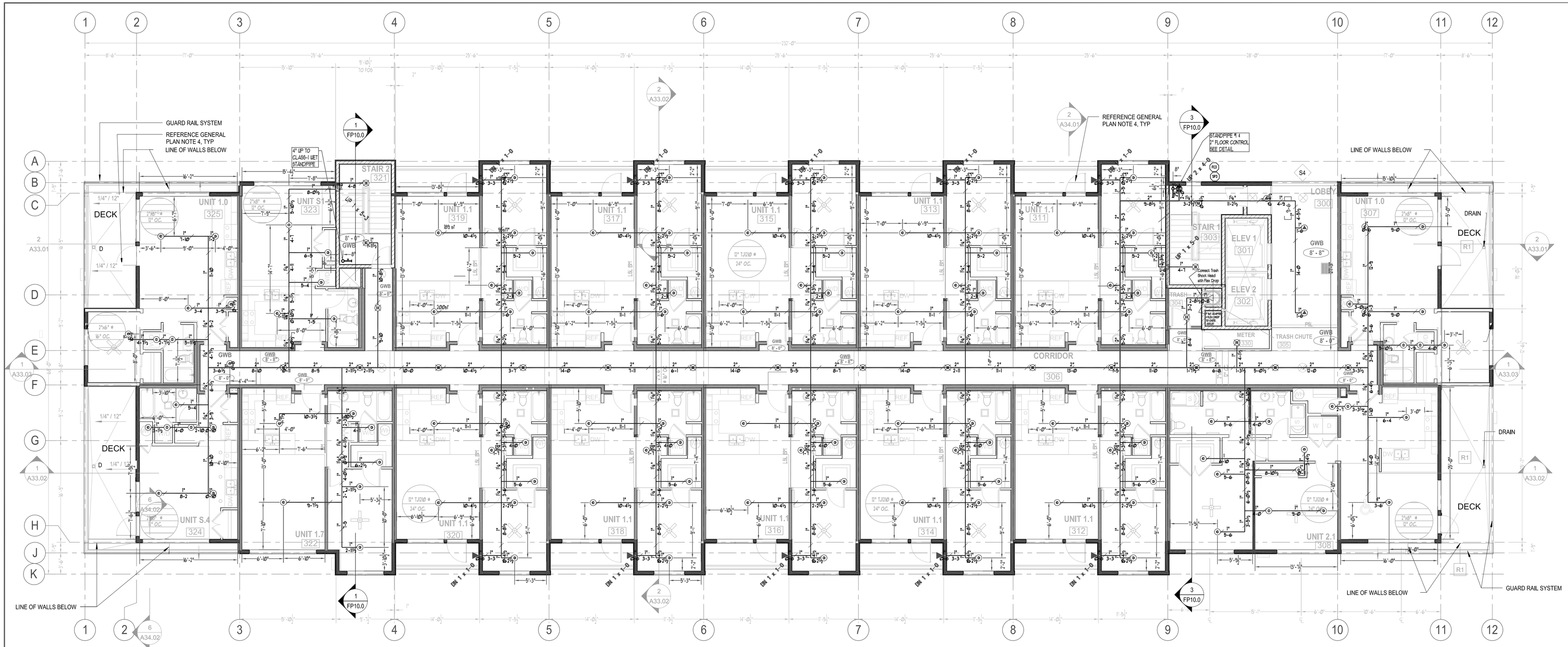

LEVEL 3 - FIRE SPRINKLER PLAN

SCALE = 1/8" = 1'-0"

PLAN NORTH

LEVELS L1 - L5 WET SYSTEM NOTES:

1. SYSTEM TYPE: WET CPVC
2. ALL MATERIALS SHALL BE NEW ADN UL LISTED OR FM APPROVED.
3. FIRE SPRINKLER SYSTEM DESIGNED, INSTALLED, BRACED AND TESTED IN ACCORDANCE WITH NFPA-13 (2010).
4. IN LOCALITIES SUBJECT TO FREEZING CONDITIONS, IT IS THE OWNERS & CONTRACTORS RESPONSIBILITY TO PROPERLY INSULATE ALL PIPING AND TO PROVIDE ADEQUATE HEAT THROUGHOUT THE WET PIPE SYSTEM AREAS.
5. PIPE & FITTINGS TO BE CPVC "BLAZEMASTER" OR STEEL SCH-10 & DYNA-FLOW MAINS.
6. HANGERS TO BE TOLCO #22, #23, #24, #28, #29, OR AFCON OFFSET OR DOUBLE OFFSET FOR CPVC SAMMY SCREWS SUS-20, ROD & PIPE RING FOR STEEL.
7. MAXIMUM HANGER SPACING ACCORDING TO NFPA-13 FOR CPVC PIPE.

3/4"	1"	1¼"	1½"	2"
5'-6"	6'-0"	6'-6"	7'-0"	8'-0"

8. HANGAR SPACING FOR STEEL PER NFPA-13 (2010)

CPVC PIPE:

CPVC PIPING COMPONENTS MAY BE DAMAGED BY CERTAIN SUBSTANCES AND CONSTRUCTION PRACTICES.

- DO NOT stack, support, hang equipment, or hang flexible wire/cable, especially communications cable, or other material on the fire sprinkler system.
- ONLY system compatible materials including, but not limited to solvent cements, caulks, sealants, cutting oils and thread pastes as noted by the CPVC fire sprinkler piping system manufacturer's installation instructions should be used in contact with this system.
- DO NOT expose CPVC products to incompatible substances, such as cutting oils, non-water based paints, packing oils, traditional pipe thread paste and dope, fungicides, termicides, insecticides, detergents building caulks, adhesive tape, solder flux, flexible wire/cable (with special consideration for communications cabling), and non-approved spray foam insulation materials.
- DO NOT expose CPVC products to edible oils, solvents, or glycol-based anti-freeze fluids.
- DO NOT expose CPVC products to open flame, solder, or soldering flux.
- DO NOT drop, distort, or impact CPVC products or allow objects to be dropped on them.
- DO NOT handle CPVC products with gloves contaminated with oils (hydrocarbons) or other incompatible materials.

Failure to follow this notice may cause cracks or fractures to develop in CPVC products resulting in property damage due to leaks or flooding.

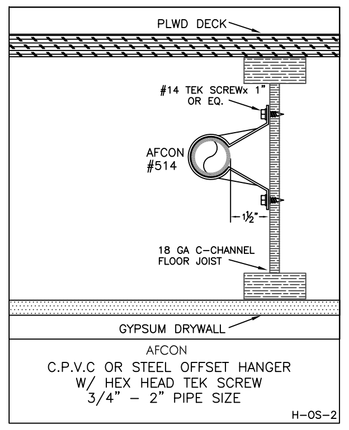

PIPE SIZES 1" - 2" TO BE CPVC BLAZEMASTER

PIPE SIZES 2½" - 4" TO BE STEEL DYNAFLOW WITH GROOVED FITTINGS

Note: Minimum Cure Prior To Pressure Testing			
	Ambient Temperature During Cure		
Pipe Size	60 TO 120 Deg. F	40 TO 59 Deg. F	0 TO 39 Deg. F
3/4"	1 HOUR	4 HOURS	48 HOURS
1"	1 1/2" HOUR	4 HOURS	48 HOURS
1 1/4" & 1 1/2"	3 HOURS	32 HOURS	10 DAYS
2"	8 HOURS	48 HOURS	*
2 1/2" & 3"	24 HOURS	96 HOURS	*

* Solvent Cement can be applied at a temperature below 40 deg. F for 2" and larger, however the the temperature of the system must be raised to 40 deg. F or higher and allowed to cure per the above recommendations prior to pressure testing. When bringing cement, pipe or fittings in from the outside, be certain they are brought up to room temperature before using the 60 to 120 deg. F cure schedule.

CPVCCURE.DWG

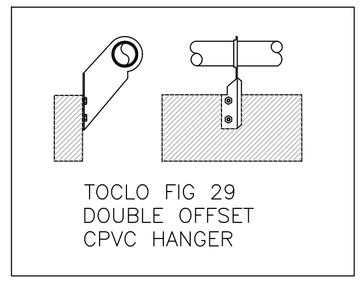

BLAZEMASTER 2000 PIPE SDR 13.5 (ASTM F442) HANGER SPACING			
NOMINAL SIZE inches	(mm)	MAX SPACING feet	(m)
3/4"	(20.0)	5.5'	(1.7)
1"	(25.0)	6.0'	(1.8)
1-1/4"	(32.0)	6.5'	(2.0)
1-1/2"	(40.0)	7.0'	(2.1)
2"	(50.0)	8.0'	(2.4)
2-1/2"	(65.0)	9.0'	(2.7)
3"	(80.0)	10.0'	(3.0)

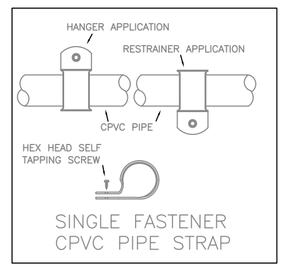

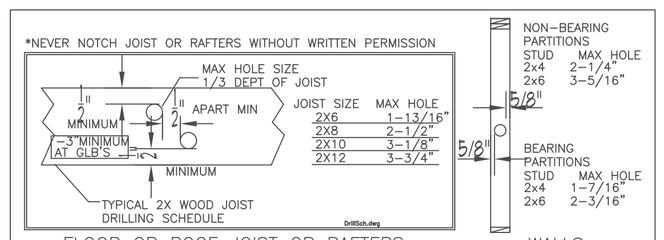

Sprinkler Head Schedule

Symbol	Count	Thread	K-Factor	Description	Note
◉	129	1/2"	4.9	HEAD1- TYCO TY2234 LFII RESIDENTIAL PENDENT WHITE 155 DEG.	on Drop
◬	3	1/2"	5.6	HEAD17- TYCO TY3531 RFII QR CONCEALED PENDENT WHITE 155 DEG.	on Drop
⊗	21	1/2"	5.6	HEAD6B- TYCO TY323 TY-FRB QR RECESSED PENDENT WHITE 155 DEG	on Drop
◀	10	1"	5.6	SIDE1- TYCO TY3335 DS-1 DRY HORZ. SIDEWALL 155 DEG.	
◁	1	1/2"	5.6	SIDE2- TYCO TY3331 TY-FRB QR HORZ. SIDEWALL WHITE 155 DET.	
164 = Total Number of Heads LEVEL-3					

PROJECT: SPYGLASS HILL APARTMENTS
ADDRESS: 642 HIGHLAND AVE
CITY: BREMERTON, WA 98337
TITLE: FIRE PROTECTION PLAN SPYGLASS LEVEL 3

SPRINX FIRE PROTECTION
A Fire Sprinkler Corporation
Contr Lic - SPRINFP011LS
2209 JAHN AVE. NW, SUITE H2
Gig Harbor, WA. 98335-1735
Phone 253.853.7780
Fax 253.853.3890
EST 1999

Date: 07/30/15 | Drawn: JGF | PAGE 6 of 10

REVISIONS

DATE	DESCRIPTION	BY

GENERAL: RUSH COMMERCIAL CONST., INC.
ADDRESS: 6622 WOLLOCHET DRIVE NW
CITY: GIG HARBOR, WA 98335
SUPER.: TOM KENNEDY
JOB PHONE #: 253-514-9404

FIELD INSPECTIONS

NAME: CITY OF BREMERTON
PHONE #: MIKE SIX (360)473-5386

STANDARD SYMBOLS

- Pipe Coupling
- Pipe Drop
- Pipe Rise
- Pipe End Cap
- 2-WAY EARTHQUAKE BRACE
- 4-WAY EARTHQUAKE BRACE
- PIPE HANGER
- Hydraulic Reference Points
- Elev. Below Top of Steel [15 sq]
- Elev. Above Finished Floor [5+6]
- b-o-Ceiling Height

WA. STATE LEVEL 3 STAMP

WASHINGTON STATE CERTIFICATE OF COMPETENCY FIRE PROTECTION SPRINKLER SYSTEMS
Joseph G. Faulkner
9491-0699-CEG Level 3
Sprinx Fire Protection, Inc.
SPRINFP011LS
Date
Expires 12/31/15
Signature

N

SCALE: 1/8" = 1'-0"

FP-6.0

FILE: Spyglass Apt FP.dwg

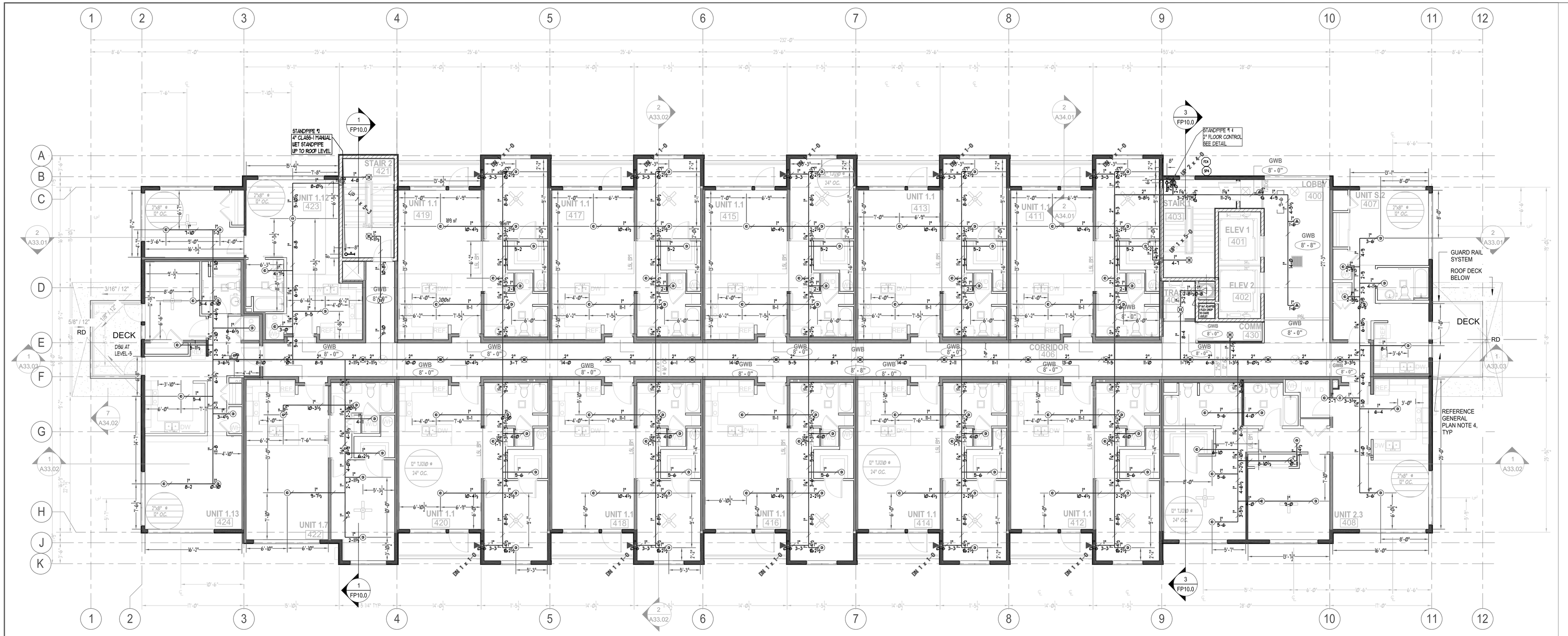

PLAN NORTH

LEVEL 4 - FIRE SPRINKLER PLAN

SCALE=1/8"=1'-0"

LEVELS L1 - L5 WET SYSTEM NOTES:

1. SYSTEM TYPE: WET CPVC
2. ALL MATERIALS SHALL BE NEW AND UL. LISTED OR FM APPROVED.
3. FIRE SPRINKLER SYSTEM DESIGNED, INSTALLED, BRACED AND TESTED IN ACCORDANCE WITH NFPA-13 (2010).
4. IN LOCALITIES SUBJECT TO FREEZING CONDITIONS, IT IS THE OWNERS & CONTRACTORS RESPONSIBILITY TO PROPERLY INSULATE ALL PIPING AND TO PROVIDE ADEQUATE HEAT THROUGHOUT THE WET PIPE SYSTEM AREAS.
5. PIPE & FITTINGS TO BE CPVC "BLAZEMASTER" OR STEEL SCH-10 & DYNA-FLOW MAINS.
6. HANGERS TO BE TOLCO #22, #23, #24, #28, #29, OR AFCON OFFSET OR DOUBLE OFFSET FOR CPVC SAMMY SCREWS SWS-20, ROD & PIPE RING FOR STEEL.
7. MAXIMUM HANGER SPACING ACCORDING TO NFPA-13 FOR CPVC PIPE.

3/4"	1"	1¼"	1½"	2"
5'-6"	6'-0"	6'-6"	7'-0"	8'-0"

8. HANGAR SPACING FOR STEEL PER NFPA-13(2010)

CPVC PIPE:

CPVC PIPING COMPONENTS MAY BE DAMAGED BY CERTAIN SUBSTANCES AND CONSTRUCTION PRACTICES.
–DO NOT stack, support, hang equipment, or hang flexible wire/cable, especially communications cable, or other material on the fire sprinkler system.
–ONLY system compatible materials including, but not limited to solvent cements, caulks, sealants, cutting oils and thread pastes as noted by the CPVC fire sprinkler piping system manufacturer's installation instructions should be used in contact with this system.
–DO NOT expose CPVC products to incompatible substances, such as cutting oils, non–water based paints, packing oils, traditional pipe thread paste and dope, fungicides, termicides, insecticides, detergents building caulks, adhesive tape, solder flux, flexible wire/cable (with special consideration for communications cabling), and non–approved spray foam insulation materials.
–DO NOT expose CPVC products to edible oils, solvents, or glycol–based anti–freeze fluids.
–DO NOT expose CPVC products to open flame, solder, or soldering flux.
–DO NOT drop, distort, or impact CPVC products or allow objects to be dropped on them.
–DO NOT handle CPVC products with gloves contaminated with oils (hydrocarbons) or other incompatible materials.
Failure to follow this notice may cause cracks or fractures to develop in CPVC products resulting in property damage due to leaks or flooding.

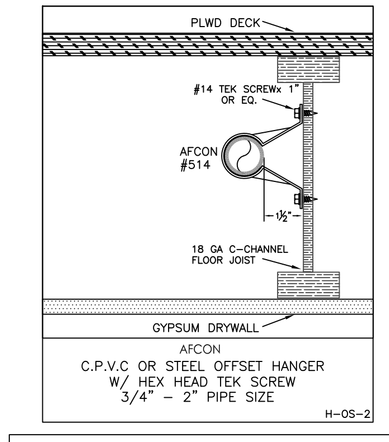

PIPE SIZES 1"- 2" TO BE CPVC BLAZEMASTER
PIPE SIZES 2½" - 4" TO BE STEEL DYNAFLOW WITH GROOVED FITTINGS

Note:Minimum Cure Prior To Pressure Testing			
	Ambient Temperature During Cure		
Pipe Size	60 TO 120 Deg. F	40 TO 59 Deg. F	0 TO 39 Deg. F
3/4"	1 HOUR	4 HOURS	48 HOURS
1"	1 1/2" HOUR	4 HOURS	48 HOURS
1 1/4" & 1 1/2"	3 HOURS	32 HOURS	10 DAYS
2"	8 HOURS	48 HOURS	*
2 1/2" & 3"	24 HOURS	96 HOURS	*

* Solvent Cement can be applied at a temperature below 40 deg. F for 2" and larger, however the the temperature of the system must be raised to 40 deg. F or higher and allowed to cure per the above recommendations prior to pressure testing. When bringing cement, pipe or fittings in from the outside, be certain they are brought up to room temperature before using the 60 to 120 deg. F cure schedule.
CPVCCURE.DWG

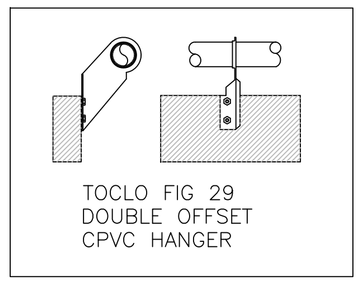

BLAZEMASTER 2000 PIPE SDR 13.5 (ASTM F442) HANGER SPACING			
NOMINAL SIZE inches	(mm)	MAX SPACING feet	(m)
3/4"	(20.0)	5.5'	(1.7)
1"	(25.0)	6.0'	(1.8)
1–1/4"	(32.0)	6.5'	(2.0)
1–1/2"	(40.0)	7.0'	(2.1)
2"	(50.0)	8.0'	(2.4)
2–1/2"	(65.0)	9.0'	(2.7)
3"	(80.0)	10.0'	(3.0)

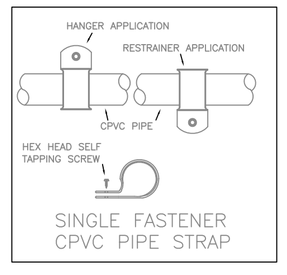

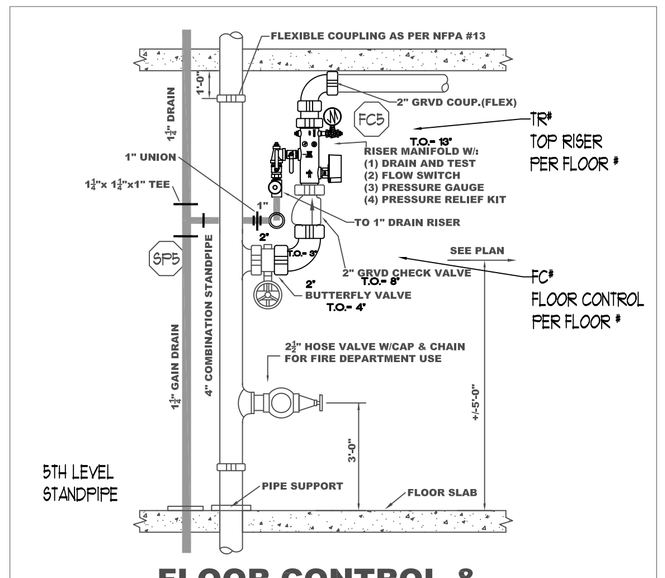

FLOOR CONTROL & HOSE VALVE DETAIL N.T.S.

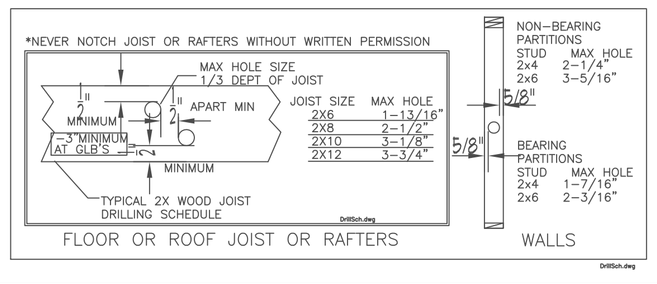

Sprinkler Head Schedule					
Symbol	Count	Thread	K–Factor	Description	Note
⊙	122	1/2"	4.9	HEAD1– TYCO TY2234 LFII RESIDENTIAL PENDENT WHITE 155 DEG.	on Drop
⊙	3	1/2"	5.6	HEAD17– TYCO TY3531 RFII QR CONCEALED PENDENT WHITE 155 DEG.	on Drop
⊗	21	1/2"	5.6	HEAD6B– TYCO TY323 TY–FRB QR RECESSED PENDENT WHITE 155 DEG	on Drop
◀	10	1"	5.6	SIDE1– TYCO TY3335 DS–1 DRY HORZ. SIDEWALL 155 DEG.	
◁	1	1/2"	5.6	SIDE2– TYCO TY3331 TY–FRB QR HORZ. SIDEWALL WHITE 155 DET.	
157 = Total Number of Heads LEVEL–4					

PROJECT: SPYGLASS HILL APARTMENTS
ADDRESS: 642 HIGHLAND AVE
CITY: BREMERTON, WA 98337
TITLE: FIRE PROTECTION PLAN SPYGLASS LEVEL 4

SPRINX FIRE PROTECTION
A Fire Sprinkler Corporation
Contr Lic.- SPRINFP011LS
2209 JAHN AVE. NW, SUITE H2
Gig Harbor, WA. 98335-1735
Phone 253.853.7780
Fax 253.853.3890
EST. 1999

Date: 07/30/15 | Drawn: JGF | PAGE 7 of 10

REVISIONS

DATE	DESCRIPTION	BY

GENERAL: RUSH COMMERCIAL CONST., INC.
ADDRESS: 6622 WOLLOCHET DRIVE NW
CITY: GIG HARBOR, WA 98335
SUPER.: TOM KENNEDY
JOB PHONE #: 253-514-9404

FIELD INSPECTIONS

NAME	PHONE #
CITY OF BREMERTON	
MIKE SIX	(360)473-5386

STANDARD SYMBOLS

Pipe Coupling	
Pipe Drop	
Pipe Rise	
Pipe End Cap	
2–WAY EARTHQUAKE BRACE	
4–WAY EARTHQUAKE BRACE	
PIPE HANGER	
Hydraulic Reference Points	
Elev. Below Top of Steel	[18 ga]
Elev. Above Finished Floor	[+#.#]
c=Ceiling Height	

WA. STATE LEVEL 3 STAMP

WASHINGTON STATE
CERTIFICATE OF COMPETENCY
FIRE PROTECTION SPRINKLER SYSTEMS
Joseph G. Faulkner
9491-0699-CEG Level 3
Sprinx Fire Protection, Inc.
SPRINFP011LS
Date
Signature
Expires 12/31/16

SCALE: 1/8" = 1'-0"

FP-7.0

FILE: Spyglass Apt FP.dwg

HYDRAULIC DESIGN INFORMATION							
AREA NUMBER	3	CODE	NFPA 13	HAZARD	LIGHT/RESIDENTIA	SYSTEM TYPE	WET
REMOTE AREA SQ. FT.	4-HD	DENSITY GPM/SQ. FT.	.10	INSIDE HOSE ALLOWANCE	0	OUTSIDE HOSE ALLOWANCE	100
AREA PER SPRINKLER	256						
TOTAL SYSTEM REQUIREMENTS:	28.8 PSI	206.9 GPM AT	WATER MAIN TAP				

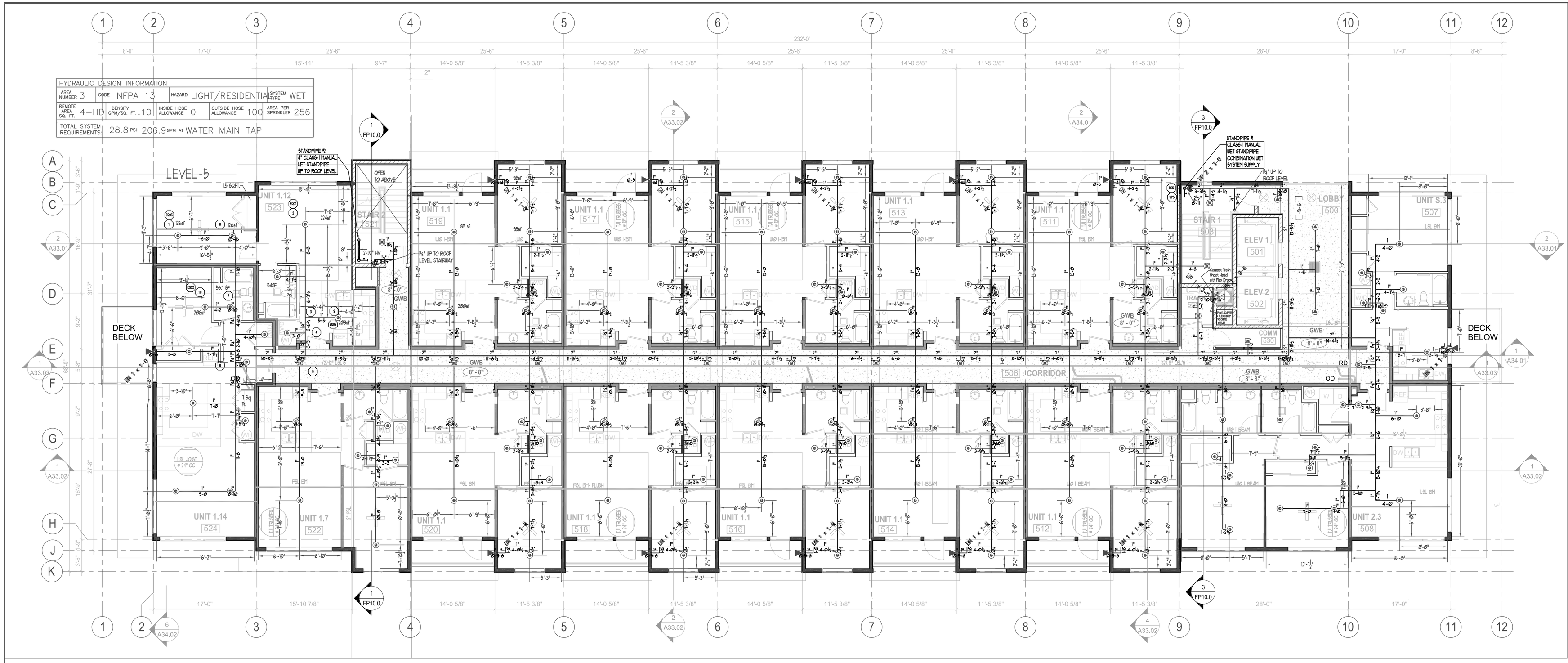

PLAN NORTH

LEVEL 5 - FIRE SPRINKLER PLAN

SCALE: 1/8" = 1'-0"

LEVELS L1 - L5 WET SYSTEM NOTES:

1. SYSTEM TYPE: WET CPVC
2. ALL MATERIALS SHALL BE NEW AND UL LISTED OR FM APPROVED.
3. FIRE SPRINKLER SYSTEM DESIGNED, INSTALLED, BRACED AND TESTED IN ACCORDANCE WITH NFPA-13 (2010).
4. IN LOCALITIES SUBJECT TO FREEZING CONDITIONS, IT IS THE OWNERS & CONTRACTORS RESPONSIBILITY TO PROPERLY INSULATE ALL PIPING AND TO PROVIDE ADEQUATE HEAT THROUGHOUT THE WET PIPE SYSTEM AREAS.
5. PIPE & FITTINGS TO BE CPVC "BLAZEMASTER" OR STEEL SCH-10 & DYNA-FLOW MAINS.
6. HANGERS TO BE TOLCO #22, #23, #24, #28, #29, OR AFCON OFFSET OR DOUBLE OFFSET FOR CPVC SAMMY SCREWS SIZE-2Ø, ROD & PIPE RING FOR STEEL.
7. MAXIMUM HANGER SPACING ACCORDING TO NFPA-13 FOR CPVC PIPE.

2"	1"	1¼"	1½"	2"
5'-6"	6'-0"	6'-6"	7'-0"	8'-0"

8. HANGAR SPACING FOR STEEL PER NFPA-13 (2010)

CPVC PIPE:

CPVC PIPING COMPONENTS MAY BE DAMAGED BY CERTAIN SUBSTANCES AND CONSTRUCTION PRACTICES.

- DO NOT stack, support, hang equipment, or hang flexible wire/cable, especially communications cable, or other material on the fire sprinkler system.
- ONLY system compatible materials including, but not limited to solvent cements, caulks, sealants, cutting oils and thread pastes as noted by the CPVC fire sprinkler piping system manufacturer's installation instructions should be used in contact with this system.
- DO NOT expose CPVC products to incompatible substances, such as cutting oils, non-water based paints, packing oils, traditional pipe thread paste and dope, fungicides, termicides, insecticides, detergents building caulks, adhesive tape, solder flux, flexible wire/cable (with special consideration for communications cabling), and non-approved spray foam insulation materials.
- DO NOT expose CPVC products to edible oils, solvents, or glycol-based anti-freeze fluids.
- DO NOT expose CPVC products to open flame, solder, or soldering flux.
- DO NOT drop, distort, or impact CPVC products or allow objects to be dropped on them.
- DO NOT handle CPVC products with gloves contaminated with oils (hydrocarbons) or other incompatible materials.

Failure to follow this notice may cause cracks or fractures to develop in CPVC products resulting in property damage due to leaks or flooding.

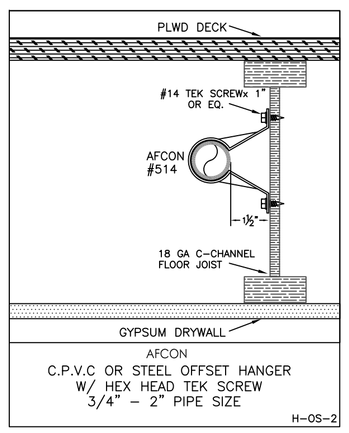

PIPE SIZES 1"- 2" TO BE CPVC BLAZEMASTER

PIPE SIZES 2½" - 4" TO BE STEEL DYNAFLOW WITH GROOVED FITTINGS

Note:Minimum Cure Prior To Pressure Testing			
	Ambient Temperature During Cure		
Pipe Size	60 TO 120 Deg. F	40 TO 59 Deg. F	0 TO 39 Deg. F
3/4"	1 HOUR	4 HOURS	48 HOURS
1"	1 1/2" HOUR	4 HOURS	48 HOURS
1 1/4" & 1 1/2"	3 HOURS	32 HOURS	10 DAYS
2"	8 HOURS	48 HOURS	*
2 1/2" & 3"	24 HOURS	96 HOURS	*

* Solvent Cement can be applied at a temperature below 40 deg. F for 2" and larger, however the the temperature of the system must be raised to 40 deg. F or higher and allowed to cure per the above recommendations prior to pressure testing. When bringing cement, pipe or fittings in from the outside, be certain they are brought up to room temperature before using the 60 to 120 deg. F cure schedule.

CPVCCURE.DWG

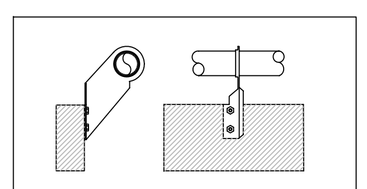

BLAZEMASTER 2000 PIPE SDR 13.5 (ASTM F442) HANGER SPACING			
NOMINAL SIZE	inches	(mm)	MAX SPACING feet (m)
3/4"	(20.0)	5.5'	(1.7)
1"	(25.0)	6.0'	(1.8)
1-1/4"	(32.0)	6.5'	(2.0)
1-1/2"	(40.0)	7.0'	(2.1)
2"	(50.0)	8.0'	(2.4)
2-1/2"	(65.0)	9.0'	(2.7)
3"	(80.0)	10.0'	(3.0)

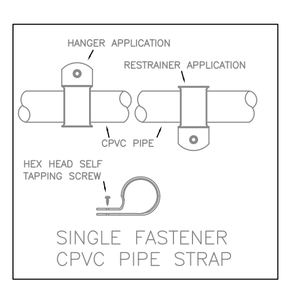

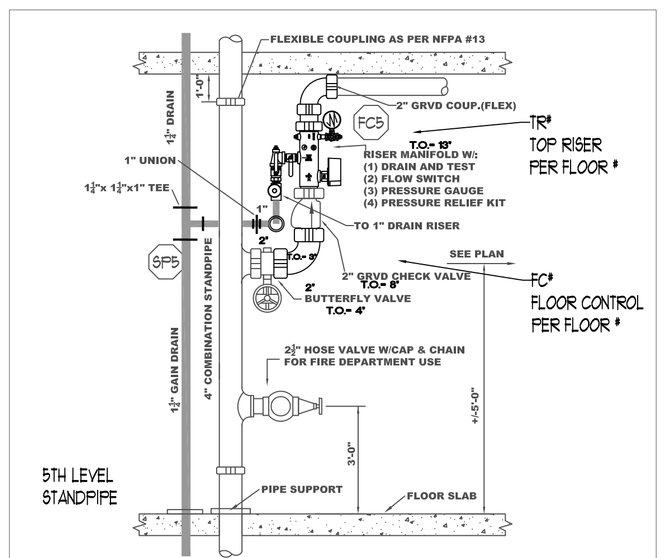

FLOOR CONTROL & HOSE VALVE DETAIL N.T.S.

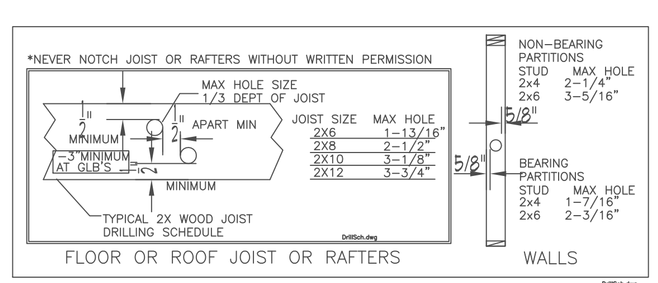

Hydraulically Calculated System

This system as shown on	.ECTION		
company print no	FP-8.0	dated	7/30/15
for	LEVEL-5 RESIDENTIAL UNIT CALC		
at	SPYGLASS APT.	contract no	21218
is designed to discharge at a rate of	0000	GPM	
(Lmin) per sq ft (m2) of floor area over a maximum area of			
4-HEADS	sq ft (m2) when supplied		
with water at the rate of	106.9	GPM (L/min)	
at	91.62	psi (bars) at the base of the riser	
Hose stream allowance of	100	GPM (L/min)	
is included in the above.			
Occupancy Classification	LIGHT/RESIDENTIAL		
Commodity Classification	N/A		
Maximum Storate Height	N/A		
Installed By:	SPRINX FIRE PROTECTION, INC.		

Sprinkler Head Schedule

Symbol	Count	Thread	K-Factor	Description	Note
◉	122	1/2"	4.9	HEAD1- TYCO TY2234 LFII RESIDENTIAL PENDENT WHITE 155 DEG.	on Drop
▲	3	1/2"	5.6	HEAD17- TYCO TY3531 RFII QR CONCEALED PENDENT WHITE 155 DEG.	on Drop
⊗	20	1/2"	5.6	HEAD6B- TYCO TY323 TY-FRB QR RECESSED PENDENT WHITE 155 DEG	on Drop
◀	10	1"	5.6	SIDE1- TYCO TY3335 DS-1 DRY HORZ. SIDEWALL 155 DEG.	
◁	1	1/2"	5.6	SIDE2- TYCO TY3331 TY-FRB QR HORZ. SIDEWALL WHITE 155 DET.	
156 = Total Number of Heads LEVEL-5					

PROJECT: SPYGLASS HILL APARTMENTS
ADDRESS: 642 HIGHLAND AVE
CITY: BREMERTON, WA 98337
TITLE: FIRE PROTECTION PLAN SPYGLASS LEVEL 5

SPRINX FIRE PROTECTION — EST. 1999
A Fire Sprinkler Corporation
Contr Lic # SPRINFP911LS
2709 JAHN AVE NW, SUITE H2, Gig Harbor, WA. 98335-1735, Phone 253.853.7780, Fax 253.853.3890

Date: 07/30/15 | Drawn: JGF | PAGE 8 of 10

REVISIONS

DATE	DESCRIPTION	BY

GENERAL: RUSH COMMERCIAL CONST., INC.
ADDRESS: 6622 WOLLOCHET DRIVE NW
CITY: GIG HARBOR, WA 98335
SUPER.: TOM KENNEDY
JOB PHONE #: 253-514-9404

FIELD INSPECTIONS

NAME: CITY OF BREMERTON
PHONE #: MIKE SIX (360)473-5386

STANDARD SYMBOLS

- Pipe Coupling
- Pipe Riser
- Pipe Stop
- Pipe End Cap
- Pipe Turned Down
- 2-WAY EARTHQUAKE BRACE
- 4-WAY EARTHQUAKE BRACE
- PIPE HANGER
- Hydraulic Reference Points
- Elev. Below Top of Steel [-s in]
- Elev. Above Finished Floor [s+c]
- c=Ceiling Height

WA. STATE LEVEL 3 STAMP

WASHINGTON STATE CERTIFICATE OF COMPETENCY FIRE PROTECTION SPRINKLER SYSTEMS
Joseph G. Faulkner
9491-0699-CEG Level 3
Sprinx Fire Protection, Inc.
SPRINFP011LS
Expires 12/31/15
Signature | Date

SCALE: 1/8" = 1' - 0"

FP-8.0

FILE: Spyglass Apt FP.dwg

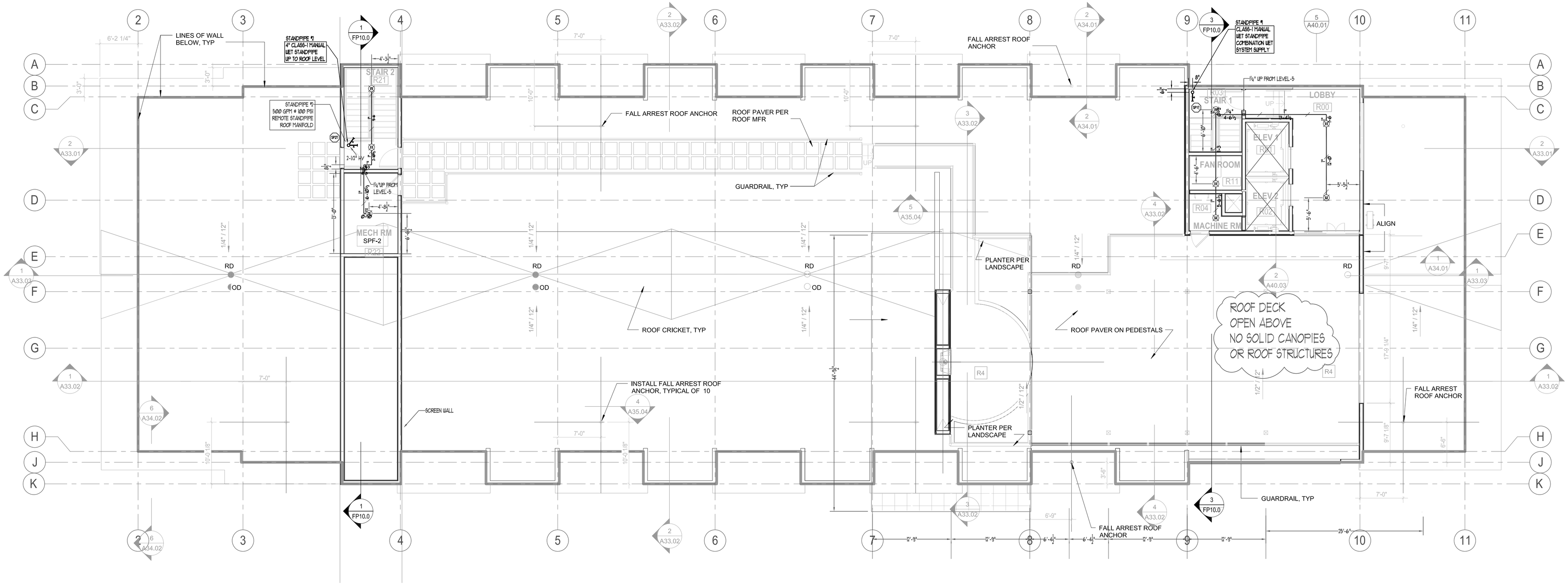

ROOF - FIRE SPRINKLER PLAN

SCALE=1/8"=1'-0"

PLAN NORTH

LEVELS L1 - L5 WET SYSTEM NOTES:

1. SYSTEM TYPE: WET CPVC
2. ALL MATERIALS SHALL BE NEW ADN UL LISTED OR FM APPROVED.
3. FIRE SPRINKLER SYSTEM DESIGNED, INSTALLED, BRACED AND TESTED IN ACCORDANCE WITH NFPA-13 (2010).
4. IN LOCALITIES SUBJECT TO FREEZING CONDITIONS, IT IS THE OWNERS & CONTRACTORS RESPONSIBILITY TO PROPERLY INSULATE ALL PIPING AND TO PROVIDE ADEQUATE HEAT THROUGHOUT THE WET PIPE SYSTEM AREAS.
5. PIPE & FITTINGS TO BE CPVC "BLAZEMASTER" OR STEEL SCH-10 & DYNA-FLOW MAINS.
6. HANGERS TO BE TOLCO #22, #23, #24, #28, #29, OR AFCON OFFSET OR DOUBLE OFFSET FOR CPVC SAMMY SCREWS SUG-20, ROD & PIPE RING FOR STEEL.
7. MAXIMUM HANGER SPACING ACCORDING TO NFPA-13 FOR CPVC PIPE.

3/4"	1"	1 1/4"	1 1/2"	2"
5'-6"	6'-0"	6'-6"	7'-0"	8'-0"

8. HANGAR SPACING FOR STEEL PER NFPA-13 (2010)

CPVC PIPE:

CPVC PIPING COMPONENTS MAY BE DAMAGED BY CERTAIN SUBSTANCES AND CONSTRUCTION PRACTICES.

- DO NOT stack, support, hang equipment, or hang flexible wire/cable, especially communications cable, or other material on the fire sprinkler system.
- ONLY system compatible materials including, but not limited to solvent cements, caulks, sealants, cutting oils and thread pastes as noted by the CPVC fire sprinkler piping system manufacturer's installation instructions should be used in contact with this system.
- DO NOT expose CPVC products to incompatible substances, such as cutting oils, non-water based paints, packing oils, traditional pipe thread paste and dope, fungicides, termicides, insecticides, detergents building caulks, adhesive tape, solder flux, flexible wire/cable (with special consideration for communications cabling), and non-approved spray foam insulation materials.
- DO NOT expose CPVC products to edible oils, solvents, or glycol-based anti-freeze fluids.
- DO NOT expose CPVC products to open flame, solder, or soldering flux.
- DO NOT drop, distort, or impact CPVC products or allow objects to be dropped on them.
- DO NOT handle CPVC products with gloves contaminated with oils (hydrocarbons) or other incompatible materials.

Failure to follow this notice may cause cracks or fractures to develop in CPVC products resulting in property damage due to leaks or flooding.

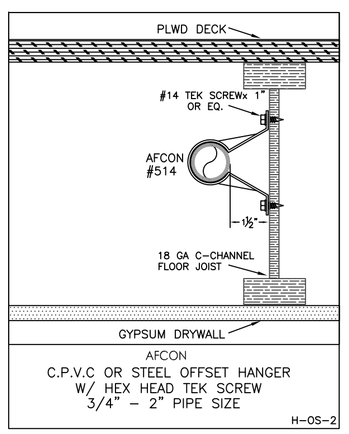

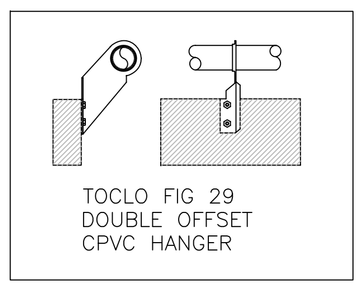

BLAZEMASTER 2000 PIPE SDR 13.5 (ASTM F442) HANGER SPACING			
NOMINAL SIZE inches	(mm)	MAX SPACING feet	(m)
3/4"	(20.0)	5.5'	(1.7)
1"	(25.0)	6.0'	(1.8)
1-1/4"	(32.0)	6.5'	(2.0)
1-1/2"	(40.0)	7.0'	(2.1)
2"	(50.0)	8.0'	(2.4)
2-1/2"	(65.0)	9.0'	(2.7)
3"	(80.0)	10.0'	(3.0)

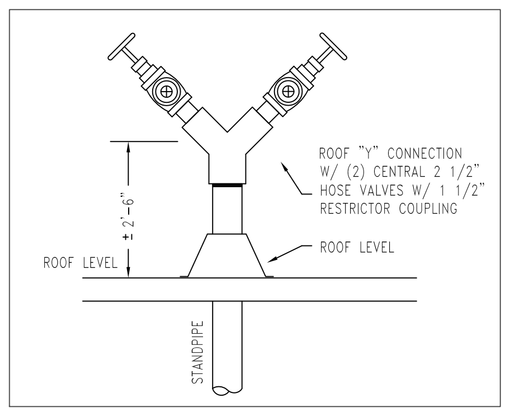

ROOF MANIFOLD DETAIL

PIPE SIZES 1"- 2" TO BE CPVC BLAZEMASTER

PIPE SIZES 2½" - 4" TO BE STEEL DYNAFLOW WITH GROOVED FITTINGS

Note:Minimum Cure Prior To Pressure Testing			
	Ambient Temperature During Cure		
Pipe Size	60 TO 120 Deg. F	40 TO 59 Deg. F	0 TO 39 Deg. F
3/4"	1 HOUR	4 HOURS	48 HOURS
1"	1 1/2" HOUR	4 HOURS	48 HOURS
1 1/4" & 1 1/2"	3 HOURS	32 HOURS	10 DAYS
2"	8 HOURS	48 HOURS	*
2 1/2" & 3"	24 HOURS	96 HOURS	*

* Solvent Cement can be applied at a temperature below 40 deg. F for 2" and larger, however the the temperature of the system must be raised to 40 deg. F or higher and allowed to cure per the above recommendations prior to pressure testing. When bringing cement, pipe or fittings in from the outside, be certain they are brought up to room temperature before using the 60 to 120 deg. F cure schedule.

CPVCCURE.DWG

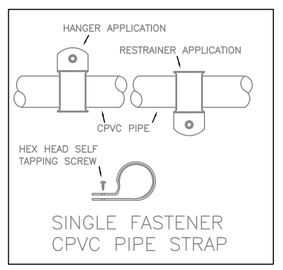

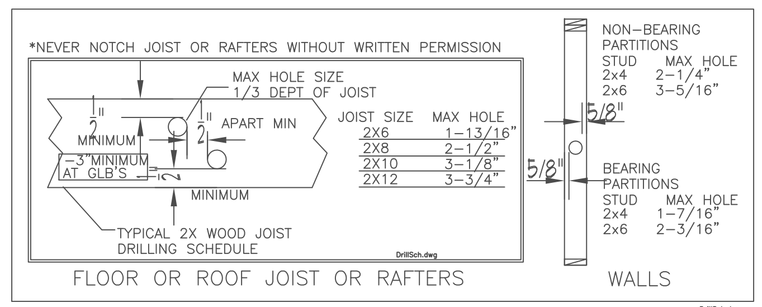

Sprinkler Head Schedule					
Symbol	Count	Thread	K-Factor	Description	Note
⊗	8	1/2"	5.6	HEAD6B- TYCO TY323 TY-FRB QR RECESSED PENDENT WHITE 155 DEG	on Drop
8 = Total Number of Heads LEVEL-ROOF					

PROJECT: SPYGLASS HILL APARTMENTS
ADDRESS: 642 HIGHLAND AVE
CITY: BREMERTON, WA 98337
TITLE: FIRE PROTECTION ROOF LEVEL PLAN

SPRINX FIRE PROTECTION
A Fire Sprinkler Corporation
Contr Lic # SPRINFP011LS
2709 JAHN AVE NW, SUITE H2
Gig Harbor, WA. 98335-1735
Phone 253.853.7780
Fax 253.853.3890
EST 1999

Date: 07/30/15 | Drawn: JGF | PAGE 9 of 10

REVISIONS

DATE	DESCRIPTION	BY

GENERAL: RUSH COMMERCIAL CONST., INC.
ADDRESS: 6622 WOLLOCHET DRIVE NW
CITY: GIG HARBOR, WA 98335
SUPER.: TOM KENNEDY
JOB PHONE #: 253-514-9404

FIELD INSPECTIONS

NAME: CITY OF BREMERTON
PHONE #: MIKE SIX (360)473-5386

STANDARD SYMBOLS

- Pipe Coupling
- Pipe Drop
- Pipe Riser
- Pipe End Cap
- 2-WAY EARTHQUAKE BRACE
- 4-WAY EARTHQUAKE BRACE
- PIPE HANGER
- Hydraulic Reference Points
- Elev. Below Top of Steel
- Elev. Above Finished Floor o.c-Ceiling Height

WA. STATE LEVEL 3 STAMP

WASHINGTON STATE CERTIFICATE OF COMPETENCY FIRE PROTECTION SPRINKLER SYSTEMS
Joseph G. Faulkner
9491-0699-CEG Level 3
Sprinx Fire Protection, Inc.
SPRINFP011LS
Date
Expires 12/31/14
Signature

SCALE: 1/8" = 1'-0"

FP-9.0

FILE: Spyglass Apt FP.dwg

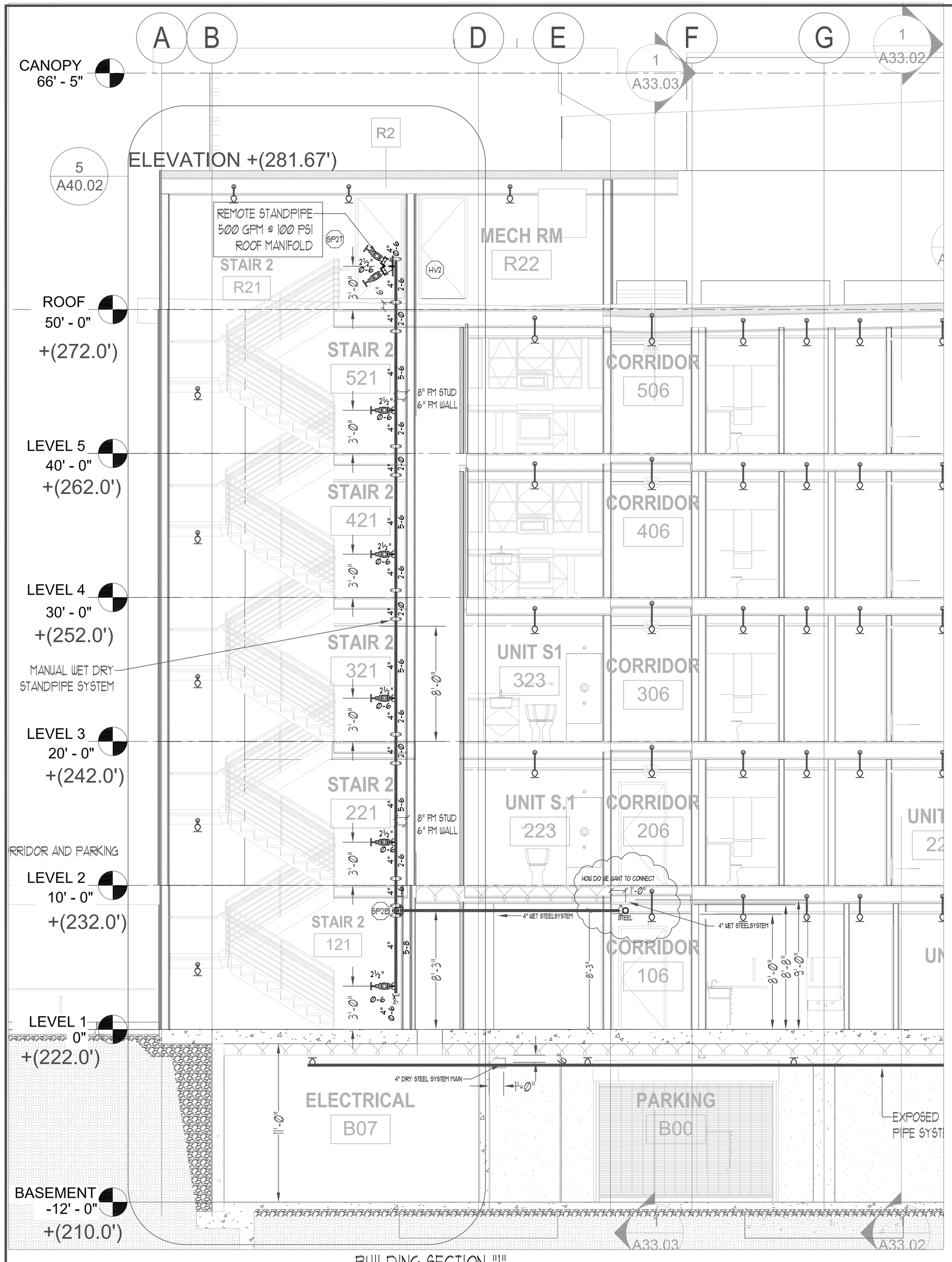

BUILDING SECTION "1"
STAIRWAY #2 / STANDPIPE #2 DETAIL
SCALE=1/4"=1'-0"

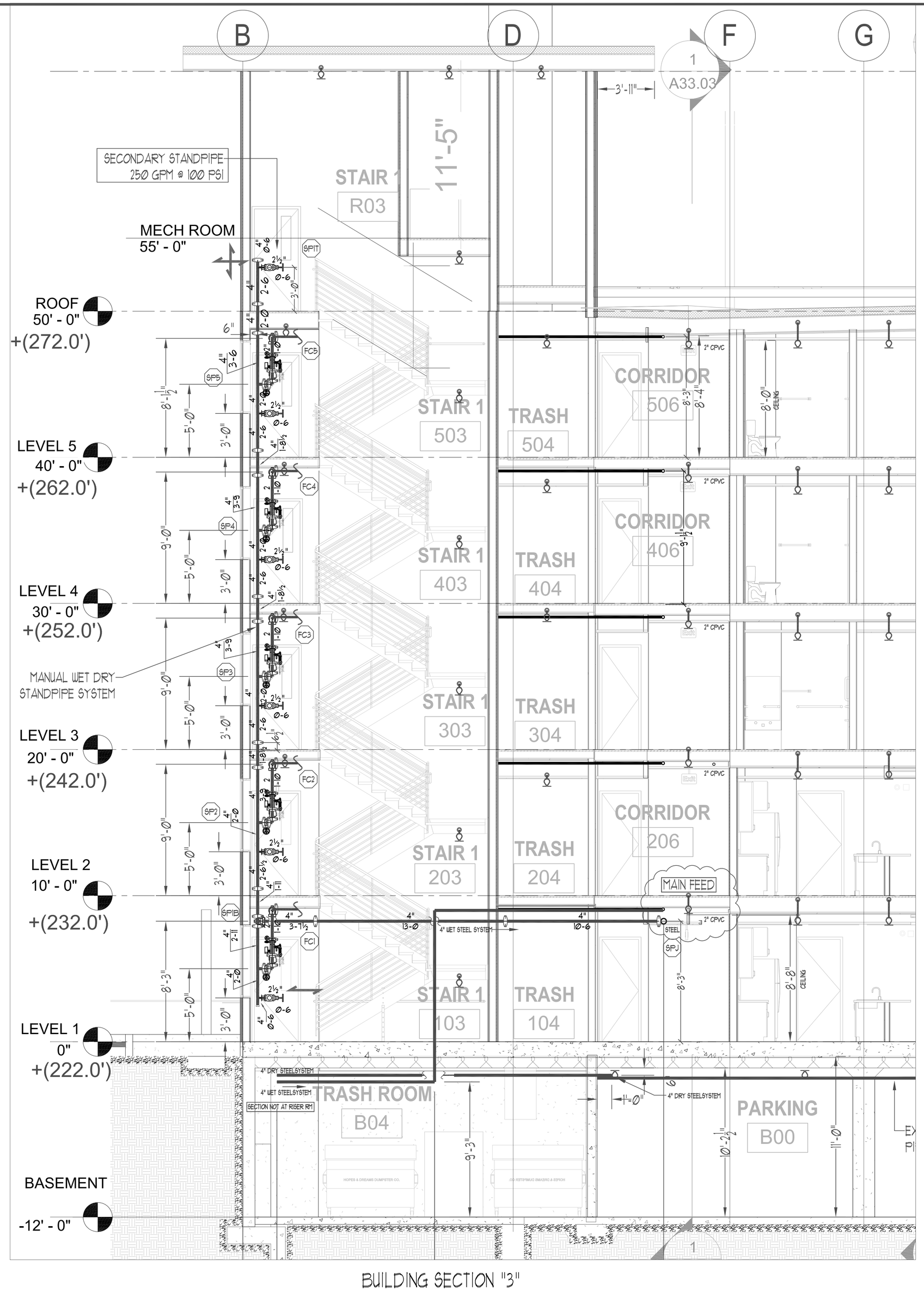

BUILDING SECTION "3"
STAIRWAY #1 / STANDPIPE #1 COMBINATION
SCALE=1/4"=1'-0"

PROJECT: SPYGLASS HILL APARTMENTS
ADDRESS: 642 HIGHLAND AVE
CITY: BREMERTON, WA 98337
TITLE: FIRE PROTECTION PLAN- STANDPIPES/ SECTION

SPRINX FIRE PROTECTION EST. 1999
A Fire Sprinkler Corporation
Cont. Lic. # SPRINFP011LS
2709 JAHN AVE. NW, SUITE H2
Gig Harbor, WA 98335-1735
Phone 253.853.7780
Fax 253.853.5890

Date: 07/30/15 | Drawn: JGF | PAGE 10 of 10

REVISIONS

DATE	DESCRIPTION	BY

GENERAL: RUSH COMMERCIAL CONST, INC.
ADDRESS: 6622 WOLLOCHET DRIVE NW
CITY: GIG HARBOR, WA 98335
SUPER.: TOM KENNEDY
JOB PHONE #: 253-514-9404

FIELD INSPECTIONS
NAME: CITY OF BREMERTON
PHONE #: MIKE SIX (360)473-5386

STANDARD SYMBOLS
Pipe Coupling
Pipe Drop
Pipe Rise
Pipe End Cap
2-WAY EARTHQUAKE BRACE
4-WAY EARTHQUAKE BRACE
PIPE HANGER
Hydraulic Reference Points
Elev. Below Top of Steel
Elev. Above Finished Floor
o-o Ceiling Height

WA. STATE LEVEL 3 STAMP

WASHINGTON STATE
CERTIFICATE OF COMPETENCY
FIRE PROTECTION SPRINKLER SYSTEMS
Joseph G. Faulkner
9491-0699-CEG Level 3
Sprinx Fire Protection, Inc.
SPRINFP011LS
Signature
Date
Expires 12/31/15

SCALE: 1/4" = 1'-0"

FP-10.0

FILE: Spyglass Apt FP.dwg